# CY39C831

# Ultra Low Voltage Boost PMIC for Solar/Thermal Energy Harvesting

## Description

The CY39C831 is the high-efficiency synchronous rectification boost DC/DC converter IC which efficiently supplies energy getting from the solar cell with the single cell or multiple cells, or from the thermoelectric generator (TEG) to the Li-ion battery.

It contains the function to control the DC/DC converter output following the maximum power point of the solar cell (MPPT: Maximum Power Point Tracking) and the protection function to charge the Li-ion battery safely.

It is possible to start-up from 0.35 V using the low-voltage process and adapts the applications which the single cell solar cell is treated as the input.

## Features

- Operation input voltage range : 0.3 V to 4.75 V
- Output voltage adjustment range : 3.0 V to 5.0 V
- Minimum input voltage at start-up : 0.35 V
- Quiescent Current (No load) : 41 µA
- Input peak current limit : 200 mA
- Built-in MPPT
- Charge voltage to the Li-ion battery/current protection function built in
- Improvement of the efficiency during the low-output power according to the auto PFM/PWM switching mode

## Applications

- Solar energy harvesting
- Thermal energy harvesting
- Li-ion battery using the single cell or multiple cells' solar cell/Super Capacitor Charger
- Portable audio players
- Cellular phone
- eBook
- Electronic dictionary
- Wireless remote controllers
- Sensor node

## Contents

1. Pin Assignments ..... 3
2. Pin Descriptions ..... 4
3. Block Diagram ..... 5
4. Absolute Maximum Ratings ..... 6
5. Recommended Operating Conditions ..... 7
6. Electrical Characteristics ..... 7
6.1 Electrical Characteristics of Constant Voltage Mode ..... 7
6.2 Electrical Characteristics of Charge Mode ..... 8
6.3 Electrical Characteristics of Boost DC/DC Converter ..... 8
7. Function ..... 9
7.1 Outline of Operation ..... 9
7.2 Start-up/Shut-down Sequence ..... 9
7.3 MPPT Control ..... 11
7.4 Function Description ..... 13
8. Typical Applications Circuit ..... 16
9. Application Notes ..... 19
10. Typical Characteristics ..... 21
11. Layout for Printed Circuit Board ..... 26
12. Usage Precaution ..... 27
13. RoHS Compliance Information ..... 27
14. Ordering Information ..... 27
15. Package Dimensions ..... 28
16. Major Changes ..... 29
Document History ..... 31

# 1. Pin Assignments

**Figure 1-1 Pin Assignments**

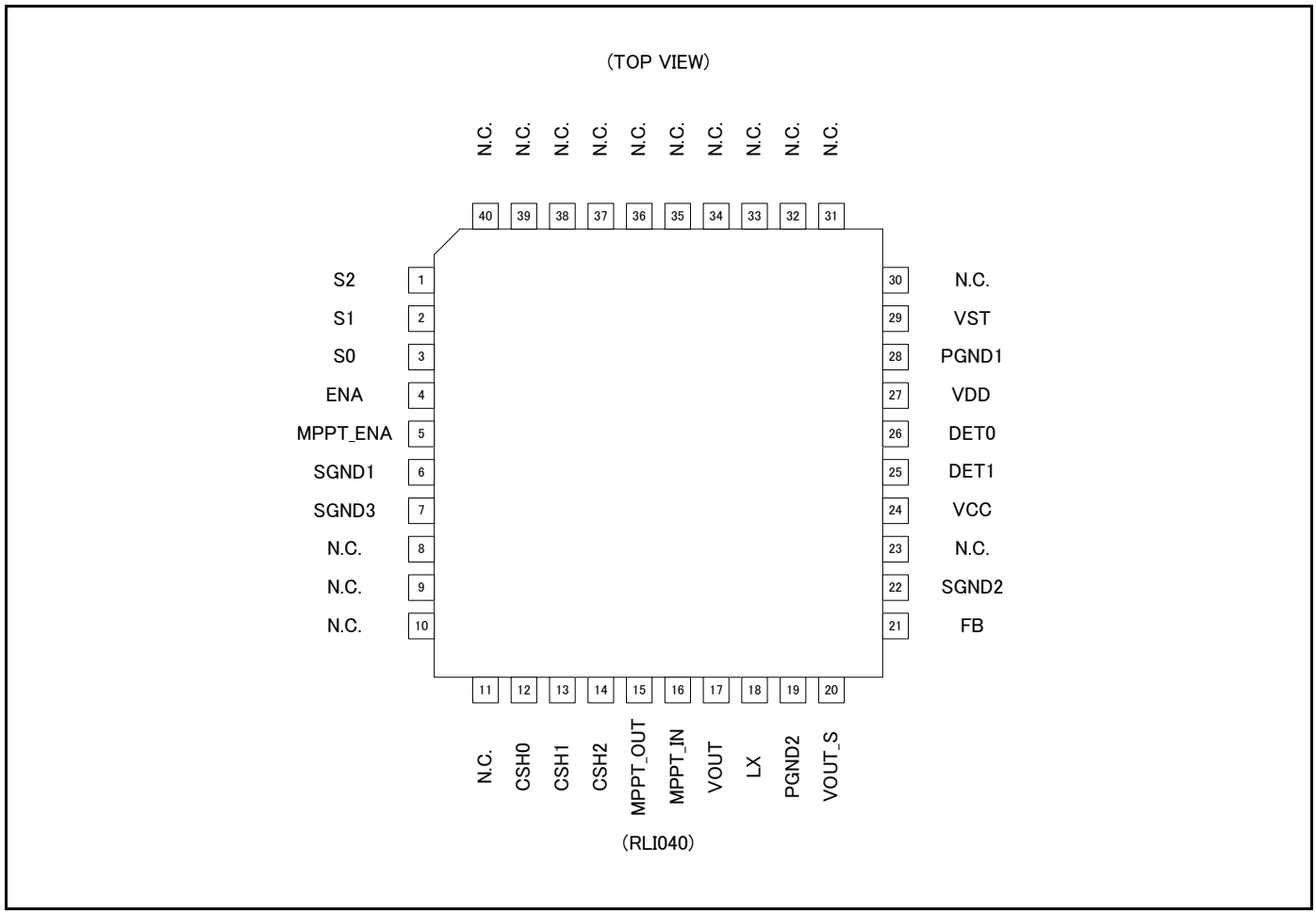

## 2. Pin Descriptions

**Table 2-1 Pin Descriptions**

| Pin No. | Pin Name | I/O | Description |
|---|---|---|---|
| 1 | S2 | I | Input pin for preset output voltage setting and MPPT setting |
| 2 | S1 | I | Input pin for preset output voltage setting and MPPT setting |
| 3 | S0 | I | Input pin for preset output voltage setting and MPPT setting |
| 4 | ENA | I | DC/DC converter control input pin |
| 5 | MPPT_ENA | I | MPPT control input pin |
| 6 | SGND1 | - | Analog ground pin |
| 7 | SGND3 | - | Analog ground pin |
| 8, 9, 10, 11 | N.C. | - | Non connection pins (Leave these pins open.) |
| 12 | CSH0 | O | Capacitor connection pin for MPPT, used only at the charge mode |
| 13 | CSH1 | I | Capacitor connection pin for MPPT, used only at the charge mode |
| 14 | CSH2 | I | Capacitor connection pin for MPPT, used only at the charge mode |
| 15 | MPPT_OUT | O | MPPT output pin, used only at the charge mode |
| 16 | MPPT_IN | I | MPPT input pin, used only at the charge mode |
| 17 | VOUT | O | Output pin of DC/DC converter |
| 18 | LX | I | Inductor connection pin |
| 19 | PGND2 | - | Power ground pin |
| 20 | VOUT_S | I | Input pin for DC/DC converter FB |
| 21 | FB | I | Feedback input pin of DC/DC converter |
| 22 | SGND2 | - | DC/DC control system ground pin |
| 23 | N.C. | - | Non connection pin (Leave this pin open.) |
| 24 | VCC | O | Control system power supply output pin |
| 25 | DET1 | O | Output pin for state notification |
| 26 | DET0 | O | Output pin for state notification |
| 27 | VDD | I | External power supply input pin |
| 28 | PGND1 | - | Power ground pin |
| 29 | VST | O | Start-up power supply output pin |
| 30, 31, 32, 33, 34, 35, 36, 37, 38, 39, 40 | N.C. | - | Non connection pins (Leave these pins open.) |

## 3. Block Diagram

**Figure 3-1 Block Diagram**

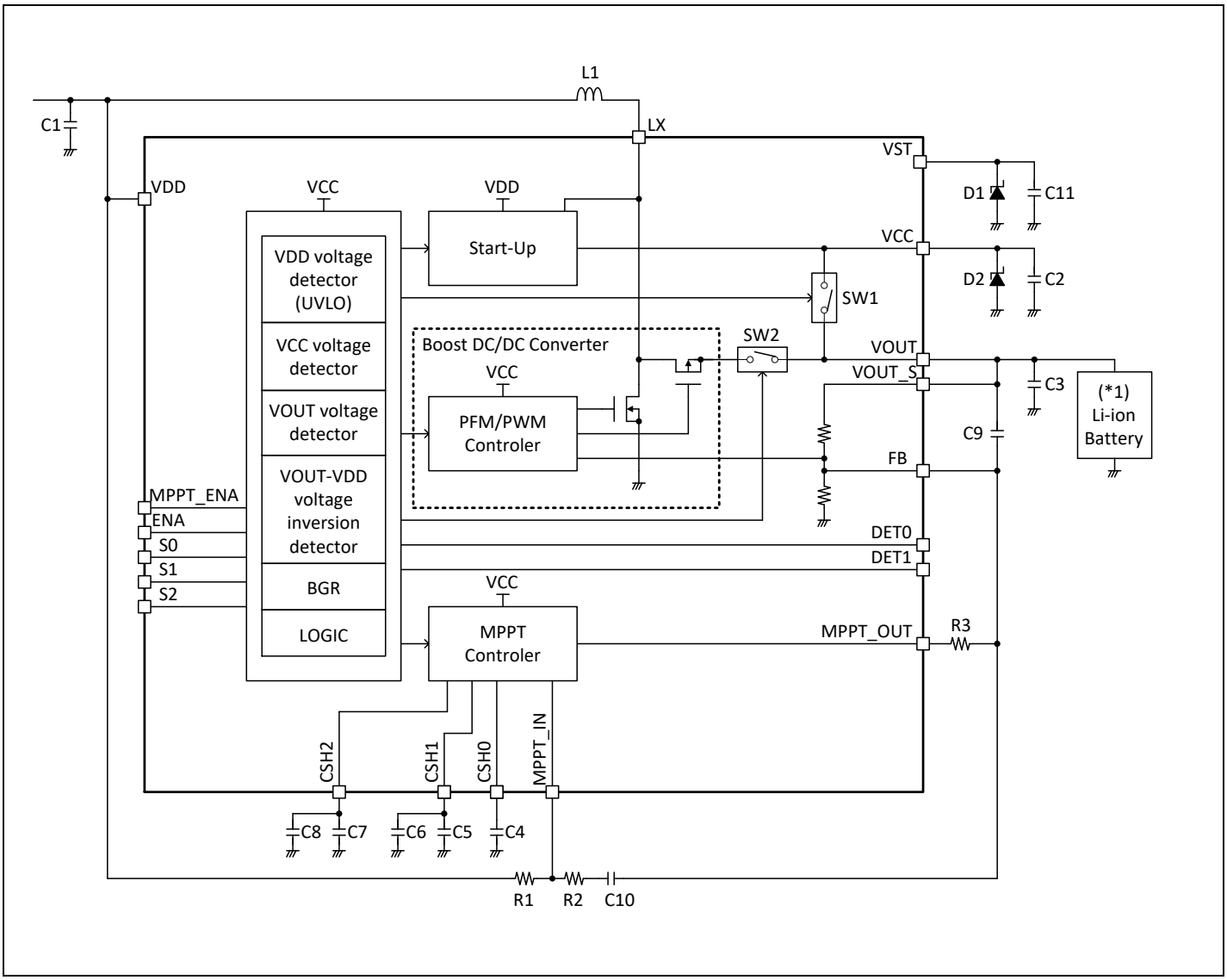


*1: Connect the Li-ion battery in the charge mode (refer to Figure 8-2)

## 4. Absolute Maximum Ratings

**Table 4-1 Absolute Maximum Ratings**

| Parameter | Symbol | Condition | Rating | | Unit |
|---|---|---|---|---|---|
| | | | Min | Max | |
| VDD input voltage | VDDMAX | VDD pin | -0.3 | +7.0 | V |
| VOUT input voltage | VOUTMAX | VOUT, VOUT_S pins | -0.3 | +7.0 | V |
| Input pin input voltage | VINPUTMAX | MPPT_ENA, ENA, S2, S1, S0, CSH0, CSH1, CSH2, MPPT_IN, MPPT_OUT pins | -0.3 | VCC pin voltage +0.3 ( ≤ +7.0) | V |
| Power dissipation | PD | Ta ≤ +25°C | - | 2500(*1) | mW |
| Storage temperature | TSTG | - | -55 | +125 | °C |
| ESD voltage1 | VESDH | Human Body Model | -2000 | +2000 | V |
| ESD voltage2 | VESDM | Machine Model | -200 | +200 | V |

*1: In the case of $\theta$ ja (wind speed 0m/s) +28°C/W

**Figure 4-1 Power Dissipation – Operating Ambient Temperature**

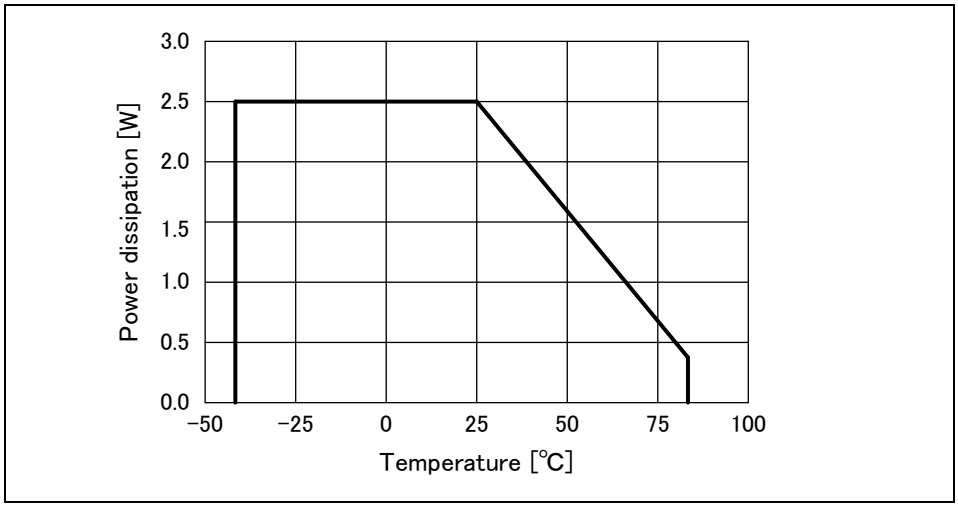


WARNING:

Semiconductor devices may be permanently damaged by application of stress (including, without limitation, voltage, current or temperature) in excess of absolute maximum ratings. Do not exceed any of these ratings.

# 5. Recommended Operating Conditions

**Table 5-1 Recommended Operating Conditions**

| Parameter | Symbol | Condition | Value | | | Unit |
|---|---|---|---|---|---|---|
| | | | Min | Typ | Max | |
| VDD input voltage | VVDD | VDD pin | 0.3 | - | 4.75 | V |
| VOUT input voltage | VVOUT | VOUT pin<br>MPPT_ENA=H, ENA=H | 2.55 | 3 | 5.5 | V |
| Input pin input voltage | VINPUT | MPPT_ENA, ENA,<br>S2, S1, S0 pins | 0 | - | VCC pin voltage | V |
| Operating ambient temperature | Ta | - | -40 | - | +85 | °C |

***WARNING:***

1. *The recommended operating conditions are required in order to ensure the normal operation of the semiconductor device. All of the device's electrical characteristics are warranted when the device is operated under these conditions.*
2. *Any use of semiconductor devices will be under their recommended operating condition.*
3. *Operation under any conditions other than these conditions may adversely affect reliability of device and could result in device failure*
4. *No warranty is made with respect to any use, operating conditions or combinations not represented on this data sheet. If you are considering application under any conditions other than listed herein, please contact sales representatives beforehand*

# 6. Electrical Characteristics

## 6.1 Electrical Characteristics of Constant Voltage Mode

**Table 6-1 Electrical Characteristics of Constant Voltage Mode (MPPT_ENA = L, ENA = H)**

(Ta=-40°C to +85°C, VDD ≤ VOUT - 0.25V, L=4.7µH, Cout=10µF)

| Parameter | Symbol | Condition | | | Value | | | Unit |
|---|---|---|---|---|---|---|---|---|
| | | MPPT_ENA | ENA | Other | Min | Typ | Max | |
| Minimum input voltage at start-up | VSTART | L | H | VDD pin, Ta = +25°C | - | 0.35 | 0.5 | V |
| Preset output voltage | VOUT | | | S2=L, S1=L, S0=L | 2.940 | 3.000 | 3.060 | V |
| | | | | S2=L, S1=L, S0=H | 3.234 | 3.300 | 3.366 | V |
| | | | | S2=L, S1=H, S0=L | 3.528 | 3.600 | 3.672 | V |
| | | | | S2=L, S1=H, S0=H | 4.018 | 4.100 | 4.182 | V |
| | | | | S2=H, S1=L, S0=L | 4.410 | 4.500 | 4.590 | V |
| | | | | S2=H, S1=L, S0=H | 4.900 | 5.000 | 5.100 | V |
| Current dissipation 1 | IQIN | | | VDD, LX pin input current, VDD=0.6V, VOUT=3.3V, IOUT=0 | - | 0.75 | 5(*1) | mA |
| Current dissipation 2 | IQOUT | | | VOUT pin input current, VOUT=3.3V, IOUT=0 | - | 32 | 64 | µA |
| VCC detection voltage 1 | VCCDETH1 | | | Upper threshold | 2.8 | 2.9 | 3 | V |
| | VCCDETL1 | | | Lower threshold | 2.5 | 2.6 | 2.7 | V |
| VOUT detection voltage 1 | VOUTDETH1 | | | Upper threshold | 2.8 | 2.9 | 3 | V |
| | VOUTDETL1 | | | Lower threshold | 2.5 | 2.6 | 2.7 | V |

*1: This parameter is not be specified. This should be used as a reference to support designing the circuits.

## 6.2 Electrical Characteristics of Charge Mode

**Table 6-2 Electrical Characteristics of Charge Mode (MPPT_ENA = H, ENA = H)**

(Ta=-40°C to +85°C, VDD ≤ VOUT - 0.25V, L=4.7µH, Cout=10µF)

| Parameter | Symbol | Condition | | | Value | | | Unit |
|---|---|---|---|---|---|---|---|---|
| | | MPPT_ENA | ENA | Other | Min | Typ | Max | |
| Minimum input voltage at start-up | VSTART | H | H | VDD pin, Ta = +25°C | - | 0.35 | 0.5 | V |
| MPPT setting | MPPTSET | | | S2=L, S1=L, S0=L | 45 | 50 | 55 | % |
| | | | | S2=L, S1=L, S0=H | 50 | 55 | 60 | % |
| | | | | S2=L, S1=H, S0=L | 55 | 60 | 65 | % |
| | | | | S2=L, S1=H, S0=H | 60 | 65 | 70 | % |
| | | | | S2=H, S1=L, S0=L | 65 | 70 | 75 | % |
| | | | | S2=H, S1=L, S0=H | 70 | 75 | 80 | % |
| | | | | S2=H, S1=H, S0=L | 75 | 80 | 85 | % |
| | | | | S2=H, S1=H, S0=H | 80 | 85 | 90 | % |
| Current dissipation 2 | IQOUT | | | VOUT pin input current, VOUT=3.3V, IOUT=0 | - | 41 | 82 | µA |
| UVLO detection voltage (VDD detection voltage) | VUVLOH | | | Upper threshold | 0.2(*1) | 0.3(*1) | 0.4(*1) | V |
| | VUVLOL | | | Lower threshold | 0.1 | 0.2 | 0.3 | V |
| VCC detection voltage 2 | VCCDETH2 | | | Upper threshold | 2.5 | 2.6 | 2.7 | V |
| | VCCDETL2 | | | Lower threshold | 2.45 | 2.55 | 2.65 | V |
| VOUT detection voltage 2 | VOUTDETH2 | | | Upper threshold | 2.5 | 2.6 | 2.7 | V |
| | VOUTDETL2 | | | Lower threshold | 2.45 | 2.55 | 2.65 | V |
| VOUT detection voltage 3 | VOUTDETH3 | | | Upper threshold | 3.88 | 4 | 4.12 | V |
| | VOUTDETL3 | | | Lower threshold | 3.58 | 3.7 | 3.82 | V |

*1: This parameter is not be specified. This should be used as a reference to support designing the circuits.

## 6.3 Electrical Characteristics of Boost DC/DC Converter

**Table 6-3 Electrical Characteristics of Boost DC/DC Converter**

(Ta=-40°C to +85°C, VDD ≤ VOUT - 0.25V, L=4.7µH, Cout=10µF)

| Parameter | Symbol | Condition | | | Value | | | Unit |
|---|---|---|---|---|---|---|---|---|
| | | MPPT_ENA | ENA | Other | Min | Typ | Max | |
| LX peak current | ILIMIN_A | L or H | H | LX pin input current | - | 200 | - | mA |
| Maximum output current | IOUT | | | VDD=0.6V, VOUT=3.3V | 8 | - | - | mA |
| | | | | VDD=3.0V, VOUT=3.3V | 80 | - | - | mA |
| Oscillation frequency | FOSC | | | PWM mode | 0.87 | 1 | 1.13 | MHz |
| Line regulation | VLINE | | | 0.4V ≤ VDD ≤ VOUT - 0.25V, IOUT=0 | - | - | 0.5 | % |
| Load regulation | VLOAD | | | VDD=0.6V, VOUT=3.3V, IOUT=0 to 8mA | - | - | 0.5 | % |

# 7. Function

## 7.1 Outline of Operation

CY39C831 is the boost DC/DC converter which has the function controls for the synchronous rectification operation of the integrated FET using the frequency set by the built-in oscillator. The converter operates in PFM at light load currents.

This converter is equipped with a constant voltage mode (MPPT_ENA = L) and a charge mode (MPPT_ENA = H).

Constant voltage mode: An output terminal VOUT outputs a constant voltage set by the S2, S1 and S0 pins.

Charge mode : The input voltage (VIN) is adjusted by following the MPPT value set by the S2, S1 and S0 pins, and a Li-ion battery can be charged.

## 7.2 Start-up/Shut-down Sequence

**Constant Voltage Mode: MPPT_ENA = L, ENA = H**

In order to operate the constant voltage mode, it supposes that to connect ceramic capacitor, electrolytic capacitor, tantalum capacitor, electric double layered capacitor, and so on, to VCC pin. See Figure 11-1 circuit to use the constant voltage mode.

The constant voltage mode is necessary to set MPPT_ENA = L and ENA = H. MPPT_ENA pin is connected to GND, and ENA pin is connected to VCC pin. See Figure 10-1 Start-up/shut-down sequences of constant voltage mode.

**Figure 7-1 Start-up/Shut-down Sequences of Constant Voltage Mode (MPPT_ENA=L, ENA=H)**

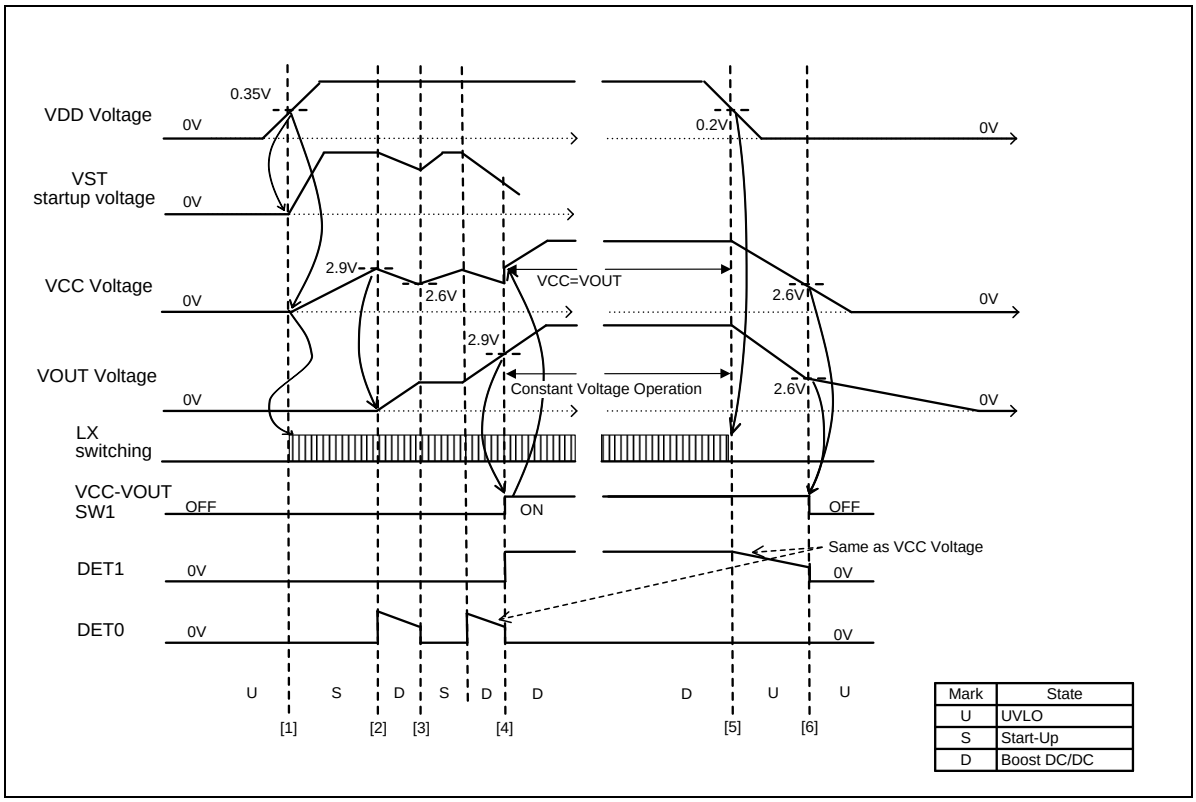


[1] When 0.35V (Minimum input voltage at start-up: VSTART) or higher voltage is applied to the VDD pin, the start-up circuit activates charging the VCC capacitor C2 (see Figure 3-1).

[2] When the VCC reaches 2.9V (upper threshold of VCC detection voltage 1: VCCDETH1), the operation of the start-up circuit stops, then the DC/DC converter activates charging the VOUT capacitor C3 (see Figure 3-1).

[3] When the VCC reaches less than 2.6V (lower threshold of VCC detection voltage 1: VCCDETL1) by the internal consumption current, the start-up circuit operates again, and this sequence is repeated until the VOUT becomes 2.9V (upper threshold of VOUT detection voltage 1: VOUTDETH1).

[4] When the VOUT reaches 2.9V (upper threshold of VOUT detection voltage 1: VOUTDETH1), the internal switch SW1 (see Figure 3-1) between VCC and VOUT is turned on, and then the VCC and the VOUT are connected internally. While the DC/DC

converter is continuously operated, charging the VOUT capacitor C3 to the preset voltage setting by S2, S1, and S0 pins is performed.

[5] When the VDD falls and reaches 0.3V (VDD input voltage: VVDD) or less, the voltage of the VOUT and VCC starts to decreases.

[6] After that the VOUT voltage reaches 2.6V (lower threshold of VOUT detection voltage 1: VOUTDETL1) or the VCC voltage reaches 2.6V (lower threshold of VCC detection voltage 1: VCCDETL1), and then the internal switch SW1 between VCC and VOUT is turned off, and the VCC and the VOUT are disconnected internally.

**Charge Mode: MPPT_ENA = H, ENA = H**

In order to operate the charge mode, it supposes that to connect lithium ion secondary batteries, and so on, to VCC pin. See Figure 11-2 circuit to use the charge mode.

The charge mode is necessary to set MPPT_ENA = H and ENA = H. Both MPPT_ENA and ENA are connected to the VCC pin, and a Li-ion battery should be connected to the VOUT pin to make the VOUT ≥ 2.6V (upper threshold of VOUT detection voltage 2: VOUTDETH2). See Figure 10-2 Start-up/shut-down sequences of charge mode.

**Figure 7-2 Start-up/Shut-down Sequences of Charge Mode (MPPT_ENA = H, ENA=H)**

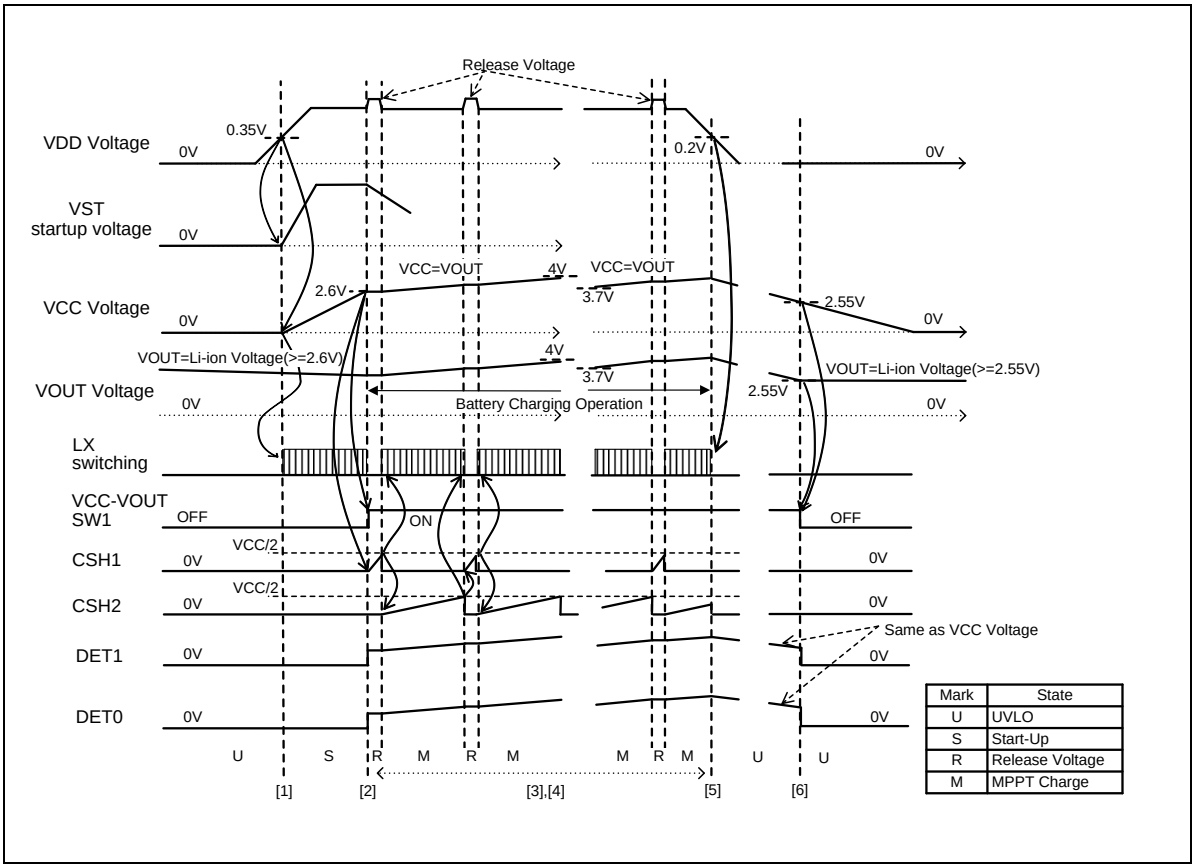


[1] When 0.35V (Minimum input voltage at start-up: VSTART) or higher voltage is applied to the VDD pin, the start-up circuit activates charging the VCC capacitor C2 (see Figure 3-1).

[2] When the VCC reaches 2.6V (upper threshold of VCC detection voltage 2: VCCDETH2) and the VOUT is higher than 2.6V (upper threshold of VOUT detection voltage 2: VOUTDETH2), the operation of the start-up circuit stops and the internal switch SW1 (see Figure 3-1) between VCC and VOUT is turned on. Then the DC/DC converter activates charging the Li-ion battery (see Figure 3-1), and the MPPT control starts at the same time.

[3] While the DC/DC converter is continuously operated, the voltage of VDD is controlled to the MPPT value setting by S0, S1, and S2 pins. (For more detail, refer to Chapter 7.3).

[4] When the voltage of the Li-ion battery reaches 4V (upper threshold of VOUT detection voltage 3: VOUTDETH3), the charging of the Li-ion battery stops. When the voltage of the Li-ion battery drops and reaches 3.7V (lower threshold of VOUT detection voltage 3: VOUTDETL3), the charging of the Li-ion battery starts again.

[5] When the VDD voltage drops and reaches 0.2V (lower threshold of UVLO detection voltage: VUVLOL), the operation of the DC/DC converter stops, and then the voltage of the VOUT and VCC starts to decreases.

[6] The VOUT voltage reaches 2.55V (lower threshold of VOUT detection voltage 2: VOUTDETL2) or the VCC voltage reaches 2.55V (lower threshold of VCC detection voltage 2: VCCDETL2, and then the internal switch SW1 between VCC and VOUT is turned off, and the VCC and the VOUT are disconnected internally to protect the Li-ion battery from an over-discharge.

## 7.3 MPPT Control

In general, the voltage of a solar cell varies depending on the load current. The operating point where the power becomes the maximum is called the optimum operating point. The control which tracks the optimum operating point is called the MPPT (Maximum Power Point Tracking) control.

**MPPT Values Setting**

The voltage where the power becomes the maximum is called the power maximum voltage, and the voltage with no load is called the release voltage. The comparison between the power maximum voltage and the release voltage is defined as the MPPT values.

In the charge mode, the input voltage (VDD) is adjusted and the DC/DC converter operates while tracking the MPPT value setting by the S2, S1 and S0 pins.

When in use, set the MPPT value after confirming the voltage dependency of the solar cell power.

**Figure 7-3 MPPT Control**

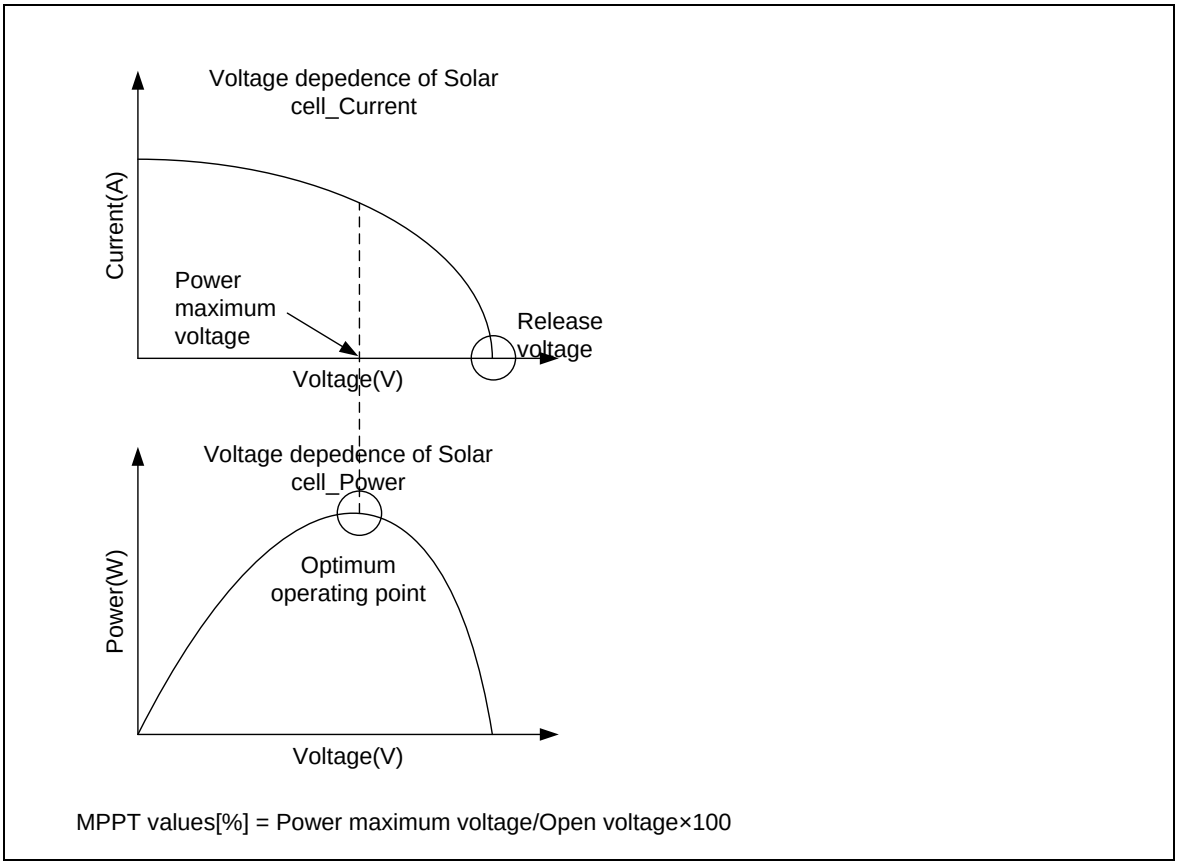

### MPPT Operation

When setting the charge mode, the internal pulse frequency is determined by the values of the capacitors C5/C6 and C7/C8 (see Figure 3-1), which are connected to the CSH1 pin, and the CSH2 pin.

During the period of high level of the internal pulse setting by the capacitors C5/C6 connected to the CHS1 pin, the release voltage is measured. The capacitors C5/C6 latch the measured voltage level, the release voltage.

During the period of low level of the internal pulse setting by the capacitors C7/C8 connected to the CSH2 pin, the charge current is determined in order to make the VDD pin's voltage equal to the MPPT setting voltage, then the charging operation starts up. The MPPT setting voltage is calculated by the following equation.

$\text{MPPT setting voltage} = \text{Release voltage} \times \text{MPPT value}$ (refer to Table 7-3 MPPT control)

When using the recommended pars, the frequency is set to 0.35Hz with 5% duty.

If not using the recommended parts, please be aware of the following points.

1. ・In general, laminated capacitances have leak current. If the inside pulse cycle setting by the capacitors
2. C7/C8 were set too long, the voltage level of the capacitors C5/C6 would drop. There is a possibility that
3. the MPPT value cannot be set correctly.
4. ・If the period of high level of inside pulse is set too short, setting by the capacitors C5/C6, the MPPT value
5. cannot be set correctly due to a lack of the measurement time of the release voltage.

**Figure 7-4 MPPT Operation**

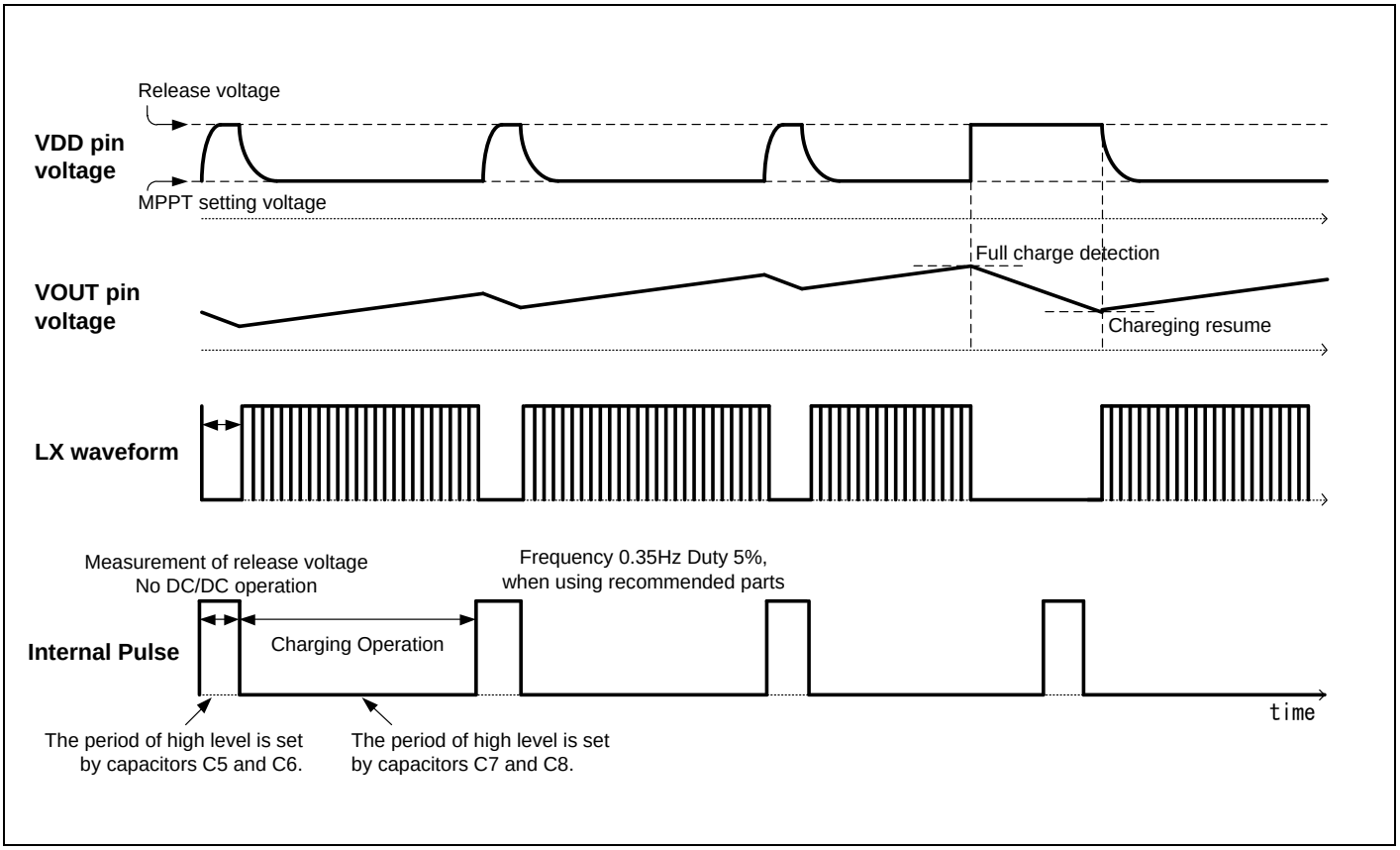

## 7.4 Function Description

### Mode control

The mode is controlled by the MPPT_ENA pin. There are the charge mode and constant voltage mode, which also determine the presence or absence of The MPPT, the UVLO, the VCC detecting, and the VOUT detecting functions. Set the MPPT_ENA pin according to an application.

And also, the DC/DC converter is controlled by the ENA pin, transfer in operating state of Table10-1.

**Table 7-1 Mode Control**

| Mode | Input Signal | | Operating State | Function | | | | | | | |
|---|---|---|---|---|---|---|---|---|---|---|---|
| | MPPT_ENA pin | ENA Pin | | UVLO | MPPT | VCC detection 1 | VCC detection 2 | VOUT detection 1 | VOUT detection 2 | VOUT detection 3 | VOUT-VDD voltage reverse detection |
| Constant voltage | L | L | VOUT output stop | OFF | OFF | ON | OFF | ON | OFF | OFF | OFF |
| | | H | VOUT output enabled | OFF | OFF | ON | OFF | ON | OFF | OFF | OFF |
| Charge | H | L | Charge stop | ON | ON | OFF | ON | OFF | ON | ON | ON |
| | | H | Charge enabled | ON | ON | OFF | ON | OFF | ON | ON | ON |

### Changing Setting Method of Preset Output Voltage & MPPT Setting

The state is controlled by the MPPT_ENA, the ENA, the S2, S1, and S0 pins.

The preset output voltage can be set in the constant voltage mode, set the MPPT_ENA = L and the ENA =H, and then set it by the S2, S1, and S0 pins.

The MPPT value can be set in the charge mode, set the MPPT_ENA = H and the ENA =H, and then set it by the S2, S1, and S0 pins.

**Table 7-2 Changing Preset Output Voltage in Constant Voltage Mode (MPPT_ENA = L, ENA = H)**

| Input Signal | | | | | Control |
|---|---|---|---|---|---|
| MPPT_ENA pin | ENA pin | S2 pin | S1 pin | S0 pin | Preset Output Voltage (V) |
| L | H | L | L | L | 3.0 |
| | | L | L | H | 3.3 |
| | | L | H | L | 3.6 |
| | | L | H | H | 4.1 |
| | | H | L | L | 4.5 |
| | | H | L | H | 5.0 |
| | | H | H | L | Setting prohibited |
| | | H | H | H | Setting prohibited |

**Table 7-3 Changing MPPT Setting in Charge Mode (MPPT_ENA = H, ENA = H)**

| Input Signal | | | | | Control |
|---|---|---|---|---|---|
| MPPT_ENA pin | ENA pin | S2 pin | S1 pin | S0 pin | MPPT Values |
| H | H | L | L | L | 50% |
| | | L | L | H | 55% |
| | | L | H | L | 60% |
| | | L | H | H | 65% |
| | | H | L | L | 70% |
| | | H | L | H | 75% |
| | | H | H | L | 80% |
| | | H | H | H | 85% |

### VCC Detection1, 2 (VCC Detection Voltage1, 2): VCC Voltage Protection

This function works with both the constant voltage mode (MPPT_ENA =L) and the charge mode (MPPT_ENA =H).

- Constant voltage mode (MPPT_ENA =L)
  The detection that the VCC pin is equal to the threshold voltage (VCCDETH1 = 2.9V) or higher is the source to start the DC/DC converter operation. It's a factor to turn on the internal switch between VCC and VOUT.
  It has the hysteresis, and the detection that the VCC pin is equal to the threshold voltage (VCCDETL1 = 2.6V) or lower is the source to stop the DC/DC converter operation. It's a factor turn off the internal switch between VCC and VOUT.
  When the VCC pin becomes higher than the threshold voltage (VCCDETH1 = 2.9V) again, this function is repeated.
- Charge mode (MPPT_ENA =H)
  The detection that the VCC pin is equal to the threshold voltage (VCCDETH2 = 2.6V) or higher is the source to start the DC/DC converter operation. It's a factor turn on the internal switch between VCC and VOUT.
  It has the hysteresis, and the detection that the VCC pin is equal to the threshold voltage (VCCDETL2 = 2.55V) or lower is the source to stop the DC/DC converter operation. It's a factor turn off the internal switch between VCC and VOUT.
  When the VCC pin becomes higher than the threshold voltage (VCCDETH2 = 2.6V) again, this function is repeated.

### VOUT Detection1, 2 (VOUT Detection Voltage1, 2)

This function works with both the constant voltage mode (MPPT_ENA =L) and the charge mode (MPPT_ENA =H).

- Constant voltage mode (MPPT_ENA =L)
  The detection that the VOUT pin is equal to the threshold voltage (VOUTDETH1 = 2.9V), and it's a factor to turn on the internal switch between VCC and VOUT.
  It has the hysteresis, and the detection that the VOUT pin is equal to the threshold voltage (VOUTDETL1 = 2.6V), and it's a factor to turn off the internal switch between VCC and VOUT.
  When the VOUT pin becomes higher than the threshold voltage (VOUTDETH1 = 2.9V) again, this function is repeated.
- Charge mode (MPPT_ENA =H)
  The detection that the VOUT pin is equal to the threshold voltage (VOUTDETH2 = 2.6V) or higher is the source to start the DC/DC converter operation. It's a factor turn on the internal switch between VCC and VOUT.
  It has the hysteresis, and the detection that the VOUT pin is equal to the threshold voltage (VOUTDETL2 = 2.55V) or lower is the source to stop the DC/DC converter operation. It's a factor turn off the internal switch between VCC and VOUT.
  When the VOUT pin becomes higher than the threshold voltage (VOUTDETH2 = 2.6V) again, this function is repeated.

### VOUT Detection3 (VOUT Detection Voltage3)

This function works with the charge mode (MPPT_ENA =H).

When the VOUT pin becomes higher than the threshold voltage (VOUTDETH3 = 4V), the DC/DC converter stops the operation.

It has the hysteresis, and when the VOUT pin becomes lower than the threshold voltage (VOUTDETL3 =3.7V), the DC/DC converter restarts the operation.

**UVLO**

This function works with the charge mode (MPPT_ENA =H).

In the state the DC/DC converter starts and during the charge operation, when the VDD pin becomes lower than the lower threshold voltage (VUVLOL = 0.2V), UVLO function works and the DC/DC converter stops the operation.

Then when the VDD pin becomes higher than the upper threshold voltage (VUVLOH = 0.3V), the DC/DC converter starts the operation again.

After that, this function is repeated.

**VOUT-VDD Voltage Reverse Monitoring**

This function works with the charge mode (MPPT_ENA =H).

The detection that the VDD pin is equal to the VOUT pin's voltage or higher is the source to stop the DC/DC control part operation.

**Output Current Protection**

It has the current limitation function to protect the circuit during the over load current. When the input current for the LX pin reaches LX peak current (ILIMIN_A), the output voltage drops in order to prevent the IC destruction.

**State Notification**

This function is independent of the MPPT_ENA setting.

The VCC voltage stage, the VOUT voltage state, and the VOUT-VDD voltage reverse state are notified by the DET[1:0] signals.

The state notification is not a power good function.

**Table 7-4 Stage Notification of Constant Voltage Mode (MPPT_ENA = L, ENA = H)**

| Output Signal | | State |
|---|---|---|
| DET1 Pin | DET0 Pin | Constant Voltage Mode (MPPT_ENA = L, ENA = H) |
| L | L | VCC terminal ≤ VCC detection voltage 1 and VOUT terminal ≤ VOUT detection voltage 1 |
| L | H | VCC terminal ≥ VCC detection voltage 1 and VOUT terminal ≤ VOUT detection voltage 1 |
| H | L | Constant voltage operation:<br>VCC terminal ≥ VCC detection voltage 1 and VOUT terminal ≥ VOUT detection voltage 1 |
| H | H | VCC terminal ≤ VCC detection voltage 1 and VOUT terminal ≥ VOUT detection voltage 1 |

**Table 7-5 Stage Notification of Charge Node (MPPT_ENA = H, ENA = H)**

| Output Signal | | State |
|---|---|---|
| DET1 Pin | DET0 Pin | Charge Mode (MPPT_ENA = H, ENA = H) |
| L | L | VCC terminal ≤ VCC detection voltage 2 and VOUT terminal ≤ VOUT detection voltage 2 |
| L | H | Abnormal stage:<br>Stage that VDD voltage is higher than VOUT voltage (VOUT < VDD) (*1) |
| H | L | Protection stop stage:<br>During the period VOUT drop from 4V to 3.7V, after VOUT reaches VOUT detection voltage 3 (VOUTDETH3 = 4V) (*2) |
| H | H | MPPT operation:<br>VCC terminal ≥ VCC detection voltage 2 and VOUT terminal ≥ VOUT detection voltage 2 |

*1: DET[1:0]=[L:L] has the highest priority.

*2: DET[1:0]=[L:H] has the highest priority.

## 8. Typical Applications Circuit

**Constant Voltage Mode**

**Figure 8-1 Application Circuit of Constant Voltage Mode (MPPT_ENA = L, ENA = H)**

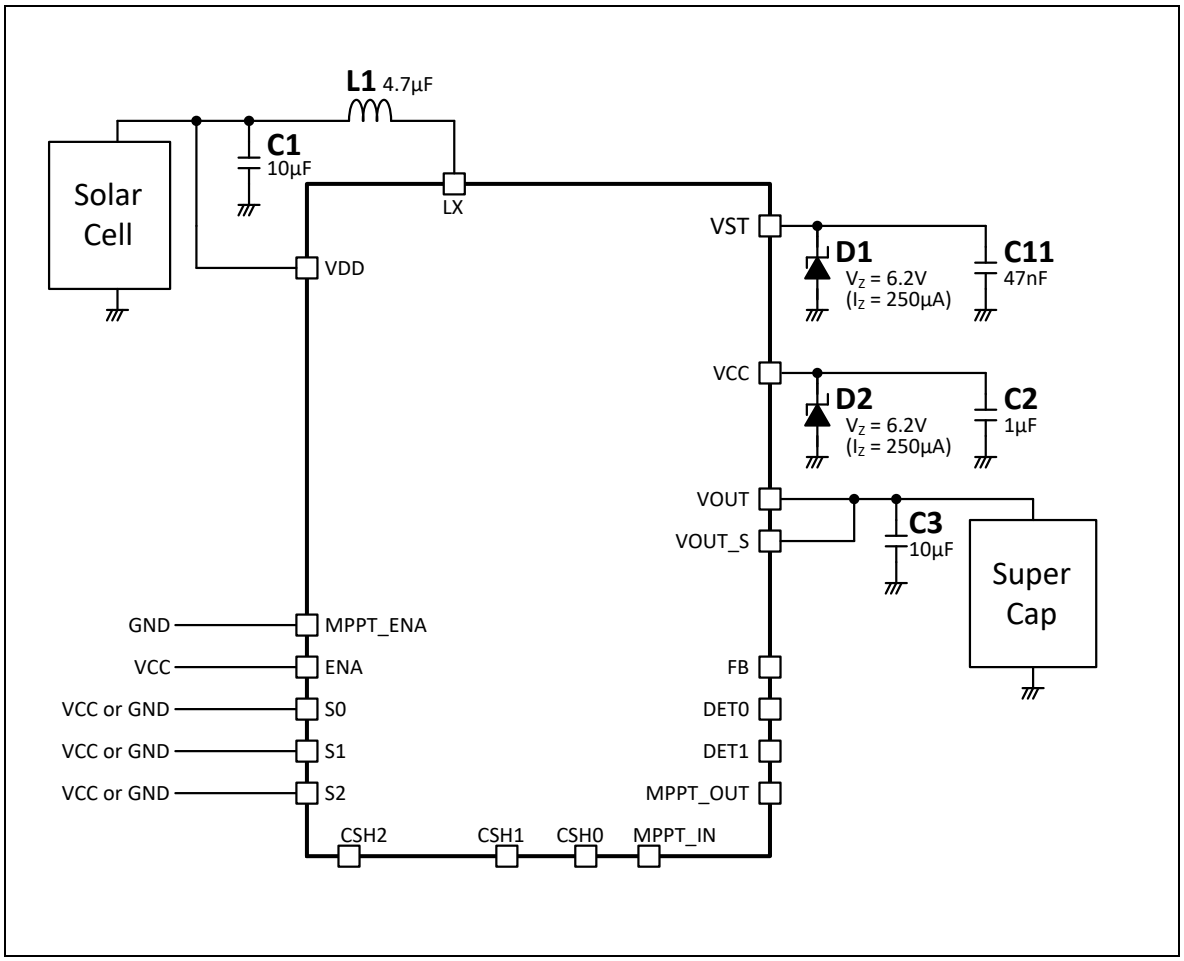

**Charge Mode**

**Figure 8-2 Application Circuit of Charge Mode (MPPT_ENA = H, ENA = H)**

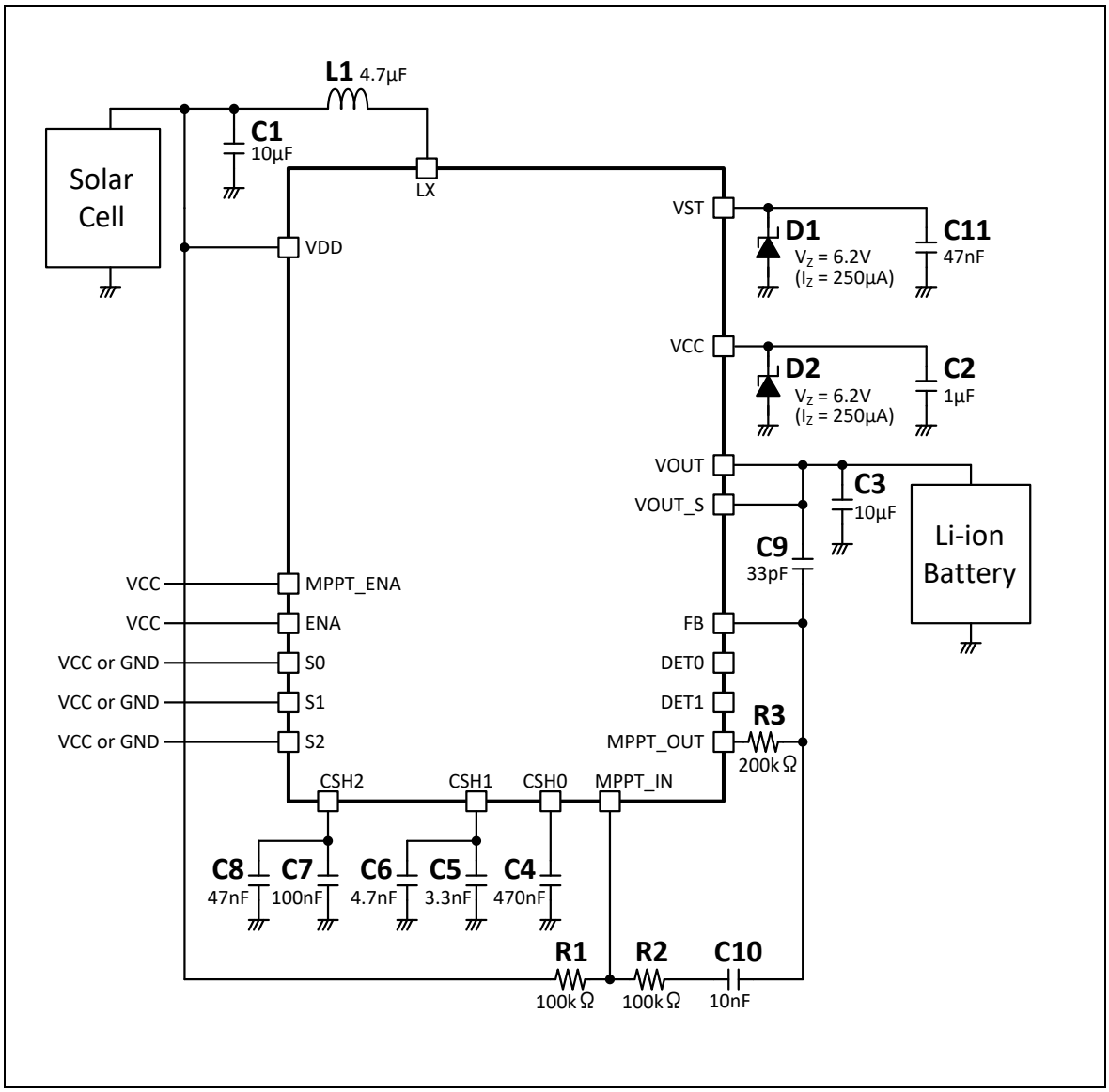

## Parts List

**Table 8-1 Parts List**

| Part number | Value | Description |
|---|---|---|
| C1 | 10 µF | Capacitor |
| C2 | 1 µF | Capacitor |
| C3 | 10 µF | Capacitor |
| C4 | 470 nF | Capacitor |
| C5 | 3.3 nF | Capacitor |
| C6 | 4.7 nF | Capacitor |
| C7 | 100 nF | Capacitor |
| C8 | 47 nF | Capacitor |
| C9 | 33 pF | Capacitor |
| C10 | 10 nF | Capacitor |
| C11 | 47 nF | Capacitor |
| R1 | 100 kΩ | Resistor |
| R2 | 100 kΩ | Resistor |
| R3 | 200 kΩ | Resistor |
| L1 | 4.7 µH | Inductor |
| D1 | $V_Z$=6.2V ($L_Z$=250 µA) | Zener diode |
| D2 | $V_Z$=6.2V ($L_Z$=250 µA) | Zener diode |

# 9. Application Notes

### Inductor

The CY39C831 is optimized to work with an inductor in the range of 4.7 µH. Select a value of 4.7 µH. Also, select an inductor with a DC current rating which can permit the peak current for the inductor.

The peak current for the inductor in steady state operation (ILMAX) can be calculated by the following equation according to the maximum current of harvesters ($IINM_{AX}$).

$$I_{LMAX} = I_{INMAX} + \frac{V_{VDD} \times (V_{VOUT} - V_{VDD})}{2 \times V_{VOUT} \times F_{OSC} \times L}$$

$$F_{OSC} = 1\text{MHz (Typ)}$$

### Harvester (Photovoltaic Power Generator)

In case of photovoltaic (or solar) energy harvesting, use a solar cell with an open-circuit voltage less than 4.75V and the preset output voltage. Electric power obtained from a solar or light is increased in proportion to the ambient illuminance. Silicone-based solar cells are single crystal silicon solar cell, polycrystalline silicon solar cell, and amorphous silicon solar cell. Organic-based solar cells are dye-sensitized solar cell (DSC), and organic thin film solar cell. Crystal silicon and polycrystalline silicon solar cells have high energy conversion efficiency. Amorphous silicon solar cells are lightweight, flexible, and produced at low cost. Dye-sensitized solar cells are composed by sensitizing dye and electrolytes, and are low-cost solar cell. Organic thin film solar cells are lightweight, flexible, and easily manufactured.

### Harvester (Temperature Difference Power Generator)

Temperature difference power generators produce electric power keeping temperature difference between the high temperature side and the low temperature side. The temperature difference power generators include the peltier elements utilizing the Seebeck effect and thermopiles that made of thermocouples in series or in parallel.

### Sizing of Input and Output Capacitors

Common capacitors are layered ceramic capacitor, electrolytic capacitor, electric double layered capacitor (EDLC), and so on. Electrostatic capacitance of layered ceramic capacitors is relatively small. However, layered ceramic capacitors are small and have high voltage resistance characteristic. Electrolytic capacitors have high electrostatic capacitance from µF order to mF order. The size of capacitor becomes large in proportion to the size of capacitance. Electric double layered capacitors have high electrostatic capacitance around 0.5F to 1F, but have low voltage resistance characteristics around 3V to 5V. Be very careful with a voltage resistance characteristic. Also, leak current, equivalent series resistance (ESR), and temperature characteristic are criteria for selecting,

**Table 9-1 Manufactures of Capacitors**

| Part Number/Series Name | Type, Capacitance | Manufacture |
|---|---|---|
| EDLC351420-501-2F-50 | EDLC, 500 mF | TDK Corporation |
| EDLC082520-500-1F-81 | EDLC, 50 mF | |
| EDLC041720-050-2F-52 | EDLC, 5 mF | |
| Gold capacitor | EDLC | Panasonic Corporation |

Energy from harvester should be stored on the Cin and Cout to operate the application block. If the size of these capacitors were too big, it would take too much time to charge energy into these capacitors, and the system cannot be operated frequently. On the other hand, if these capacitors were too small, enough energy cannot be stored on these capacitors for the application block. The sizing of the Cin and Cout is important.

First of all, apply the following equation and calculate energy consumption for an application from voltage, current, and time during an operation.

$$E_{Appli.}[J] = V_{Appli.} \times I_{Appli.} \times t_{Appli.}$$

The energy stored on a capacitor is calculated by the following equation.

$$E_c[J] = \frac{1}{2}CV^2$$

Since the energy in a capacitor is proportional to the square of the voltage, it is energetically advantageous for the boost DC/DC converter, the input voltage, is less than the output voltage, to make the Cout larger.

The Cin and the Cout are sized so as to satisfy the following equation (refer to Figure 9-1). The η, the efficiency of the CY39C831, is determined from the graph of the efficiency shown in Figure 10-1

$$E_{Appli.} \leq dE_{Cin} \times \eta + dE_{Cout}$$

$dE_{Cin}$ and $dE_{Cout}$ are the available energies for the application.

$$dE_{Cin}[J] = \frac{1}{2}Cin(VDD^2 - 0.3^2)$$

$$dE_{Cout}[J] = \frac{1}{2}Cout(VOUT^2 - VOMIN^2)$$

**Figure 9-1 Example of Energy Harvesting System**

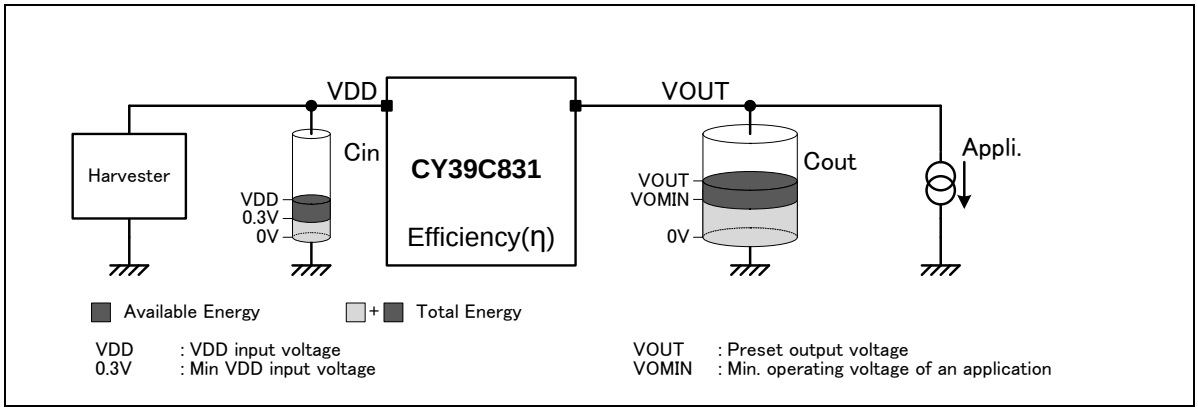


Before calculating the initial charging time ($T_{Initial}$), calculate the total energy ($E_{Cin}$ and $E_{Cout}$) stored on both Cin and Cout.

$$E_{Cin}[J] = \frac{1}{2}Cin \times VDD^2$$

$$E_{Cout}[J] = \frac{1}{2}Cout \times VOUT^2$$

$P_{Harvester}$ is a power generation capability of a harvester. An initial charging time ($T_{Initial}$) is calculated by the following equation.

$$T_{Initial} = \frac{E_{Cin}}{P_{Harvester}} + \frac{E_{Cout}}{P_{Harvester} \times \eta}$$

Repeat charging time ($T_{Repeat}$) is calculated by the following equation. The $T_{Repeat}$ become shorter than $T_{Initial}$.

$$T_{Repeat} = \frac{dE_{Cin}}{P_{Harvester}} + \frac{dE_{Cout}}{P_{Harvester} \times \eta}$$

## 10. Typical Characteristics

**Figure 10-1 Typical Characteristics of Constant Voltage Mode (MPPT_ENA = L, ENA = H)**

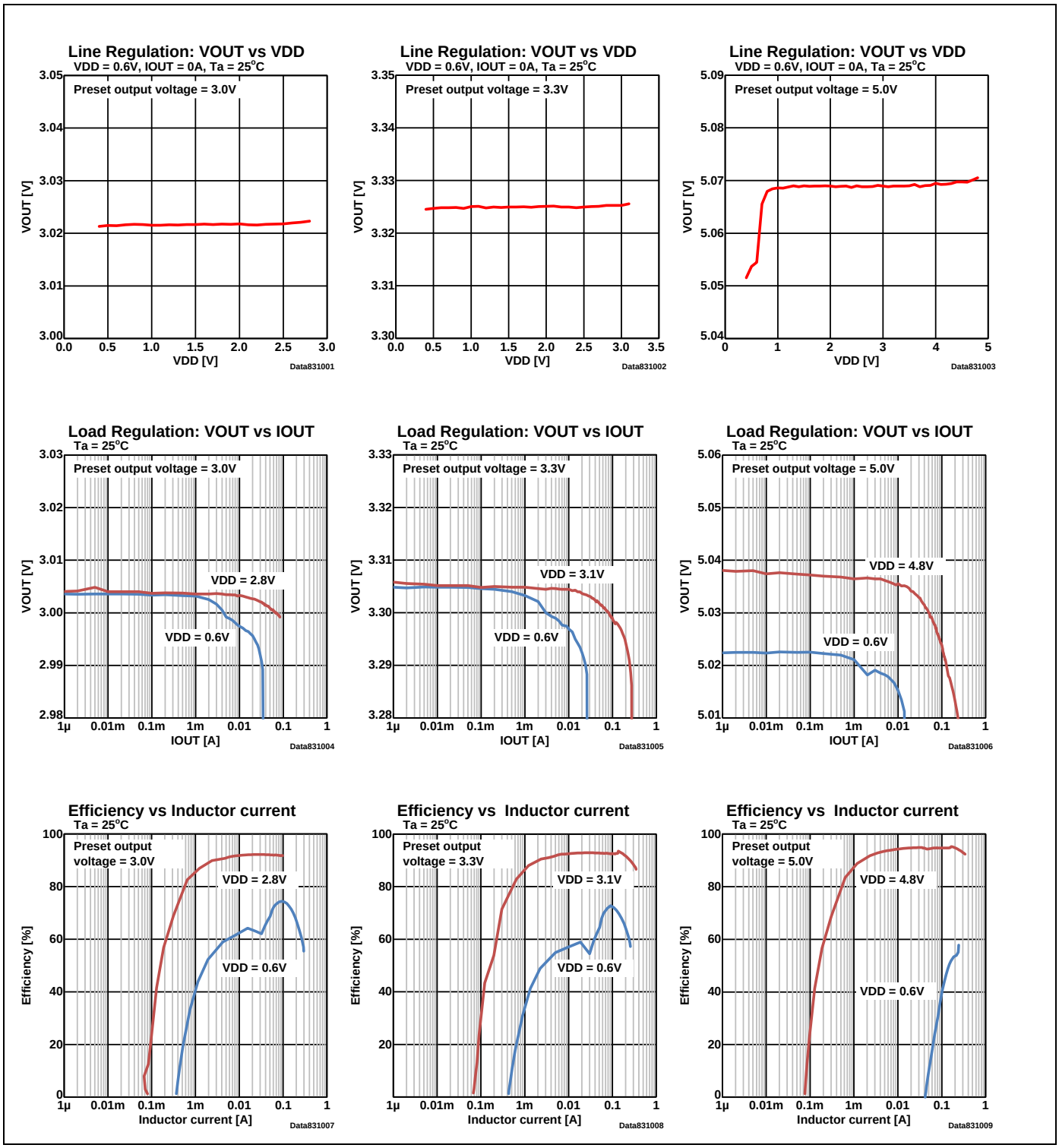

**Min. VDD input voltage in start-up vs Temp.**

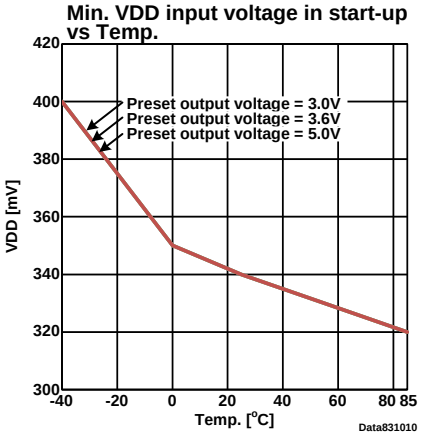


**IQOUT vs Temp.**

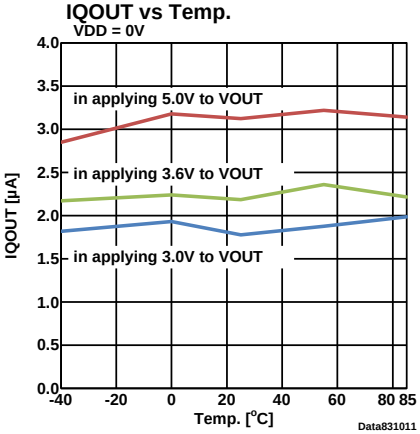


**Efficiency vs VDD**

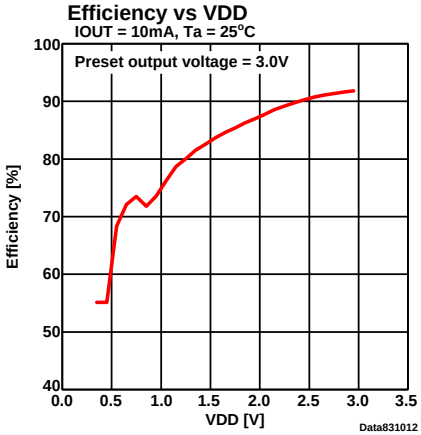


**Inductor current in start-up vs VDD**

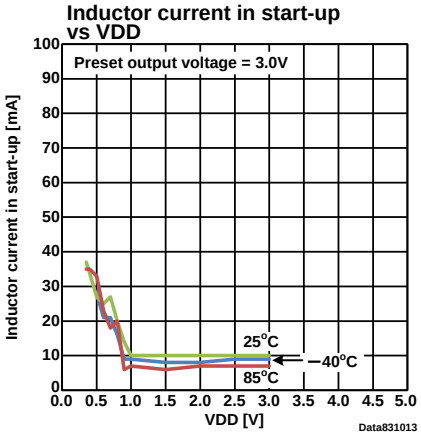


**Inductor current in start-up vs VDD**

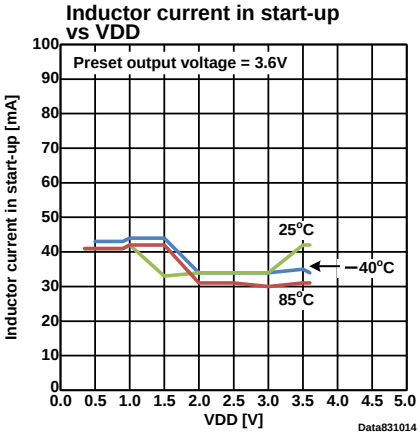


**Inductor current in start-up vs VDD**

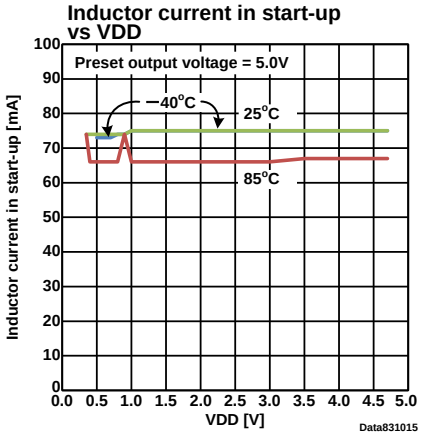

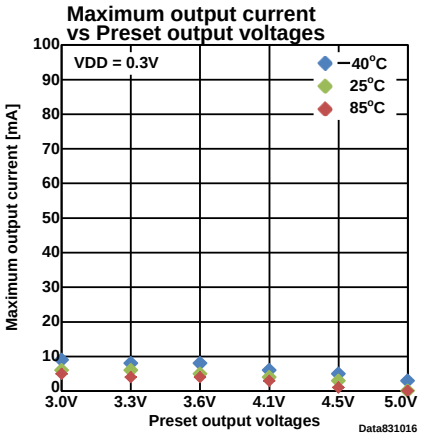
Maximum output current
vs Preset output voltages
VDD = 0.3V
−40°C
25°C
85°C
Maximum output current [mA]
Preset output voltages
3.0V
3.3V
3.6V
4.1V
4.5V
5.0V
Data831016

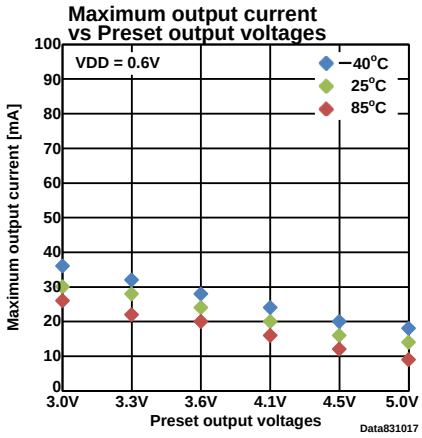
Maximum output current
vs Preset output voltages
VDD = 0.6V
−40°C
25°C
85°C
Maximum output current [mA]
Preset output voltages
3.0V
3.3V
3.6V
4.1V
4.5V
5.0V
Data831017

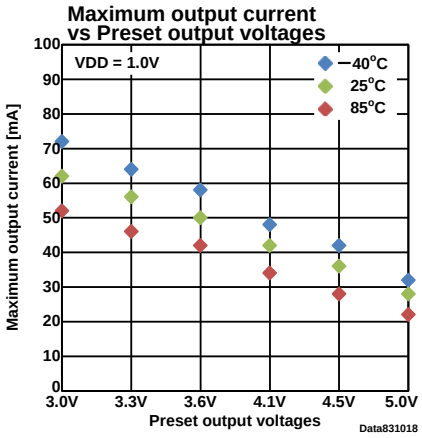
Maximum output current
vs Preset output voltages
VDD = 1.0V
−40°C
25°C
85°C
Maximum output current [mA]
Preset output voltages
3.0V
3.3V
3.6V
4.1V
4.5V
5.0V
Data831018

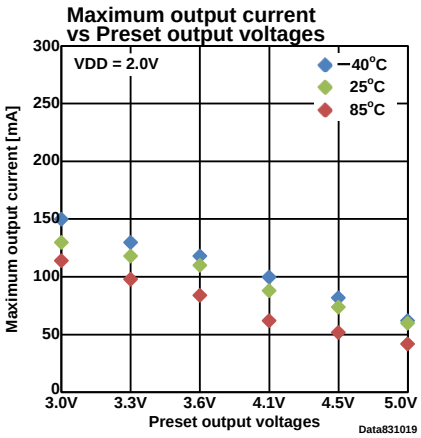
Maximum output current
vs Preset output voltages
VDD = 2.0V
−40°C
25°C
85°C
Maximum output current [mA]
Preset output voltages
3.0V
3.3V
3.6V
4.1V
4.5V
5.0V
Data831019

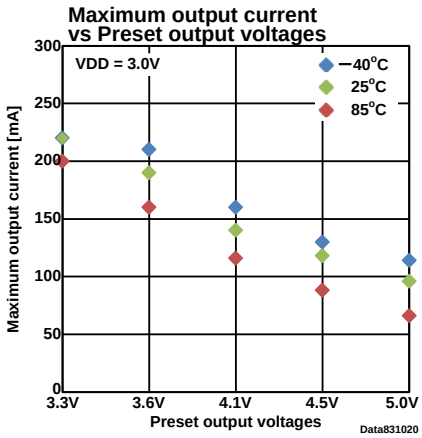
Maximum output current
vs Preset output voltages
VDD = 3.0V
−40°C
25°C
85°C
Maximum output current [mA]
Preset output voltages
3.3V
3.6V
4.1V
4.5V
5.0V
Data831020

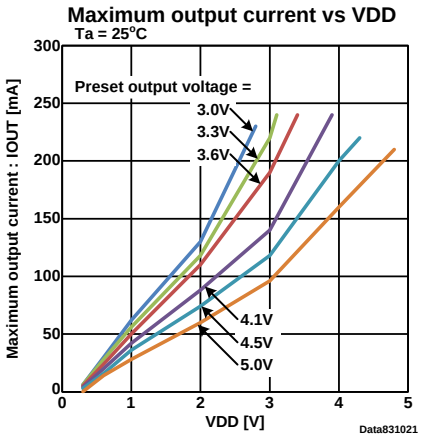
Maximum output current vs VDD
Ta = 25°C
Preset output voltage =
3.0V
3.3V
3.6V
4.1V
4.5V
5.0V
Maximum output current : IOUT [mA]
VDD [V]
Data831021

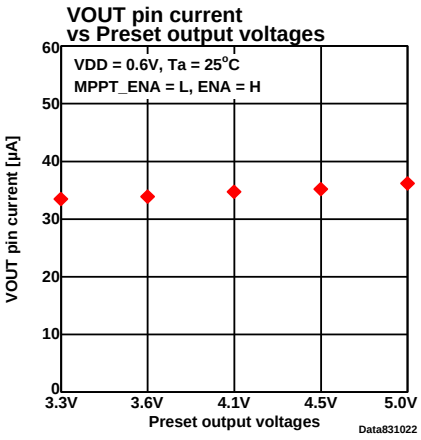
VOUT pin current
vs Preset output voltages
VDD = 0.6V, Ta = 25°C
MPPT_ENA = L, ENA = H
VOUT pin current [µA]
Preset output voltages
3.3V
3.6V
4.1V
4.5V
5.0V
Data831022

**Figure 10-2 Switching Waveforms of Constant Voltage Mode (MPPT_ENA = L, ENA = H)**

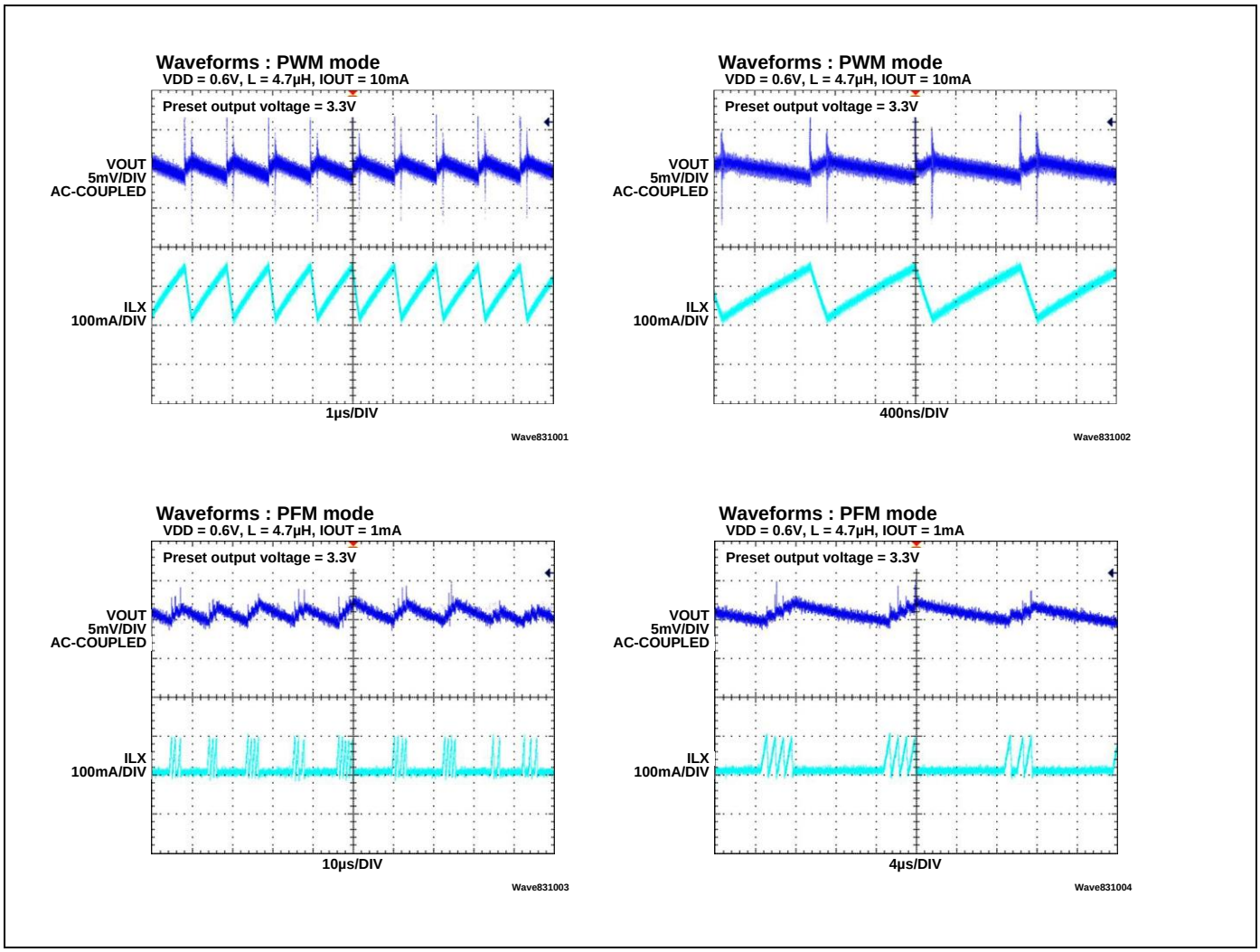

**Figure 10-3 Typical Characteristics of Charge Mode (MPPT_ENA = H, ENA = H)**

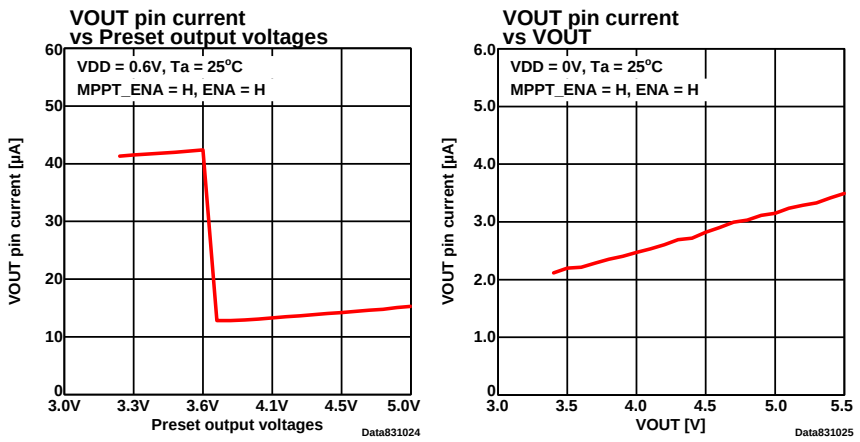


**Figure 10-4 Waveforms of VDD Pin Voltage in Charge Mode (MPPT_ENA = H, ENA = H)**

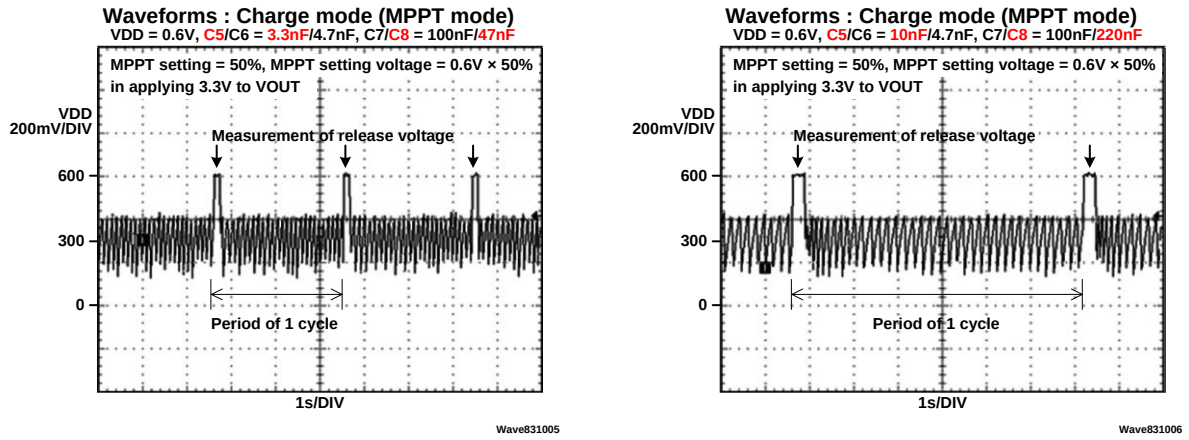

## 11. Layout for Printed Circuit Board

**Note the Points Listed Below in Layout Design**

- Place the switching parts (*1) on top layer, and avoid connecting each other through through-holes.
- Make the through-holes connecting the ground plane close to the GND pins of the switching parts(*1).
- Be very careful about the current loop consisting of the output capacitor C3, the VOUT pin of IC, and the PGND2 pin. Place and connect these parts as close as possible to make the current loop small.
- The input capacitor C1 and the inductor L1 are placed adjacent to each other.
- Place the bypass capacitor C11 close to VST pin, and make the through-holes connecting the ground plane close to the GND pin of the bypass capacitor C11.
- Place the bypass capacitor C2 close to VCC pin, and make the through-holes connecting the ground plane close to the GND pin of the bypass capacitor C2.
- Draw the feedback wiring pattern from the VOUT_S pin to the output capacitor C3 pin. The wiring connected to the VOUT_S pin is very sensitive to noise so that the wiring should keep away from the switching parts(*1). Especially, be very careful about the leaked magnetic flux from the inductor L1, even the back side of the inductor L1.

*1: Switching parts: IC (CY39C831), Input capacitor (C1), Inductor (L1), Output capacitor (C3).
Refer to Figure 3-1.

**Figure 11-1 Example of a Layout Design**

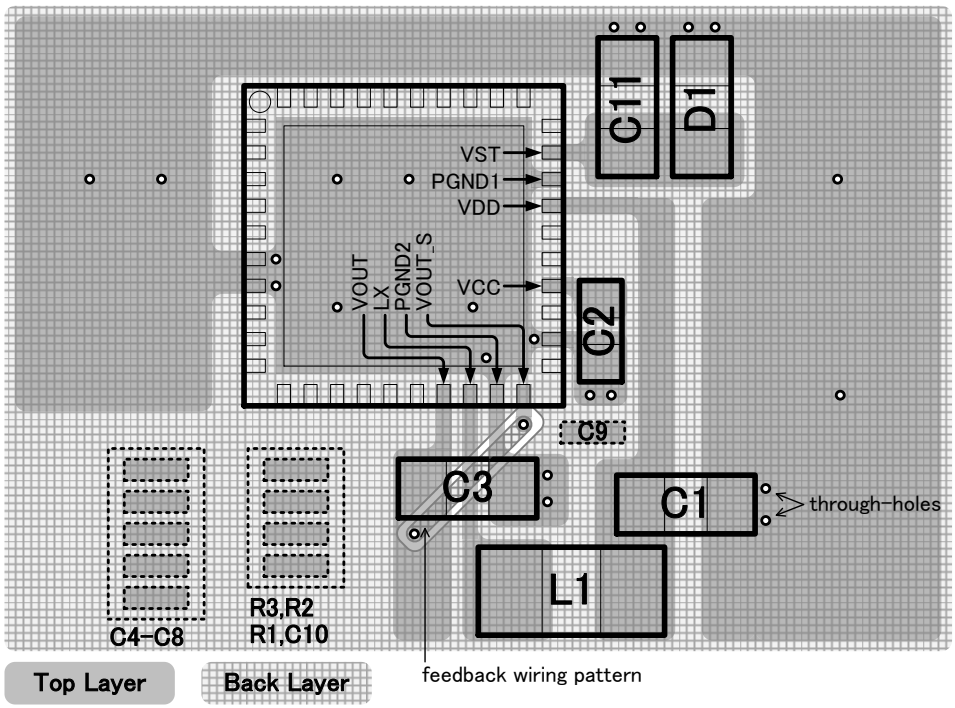

## 12. Usage Precaution

**Do Not Configure the IC Over the Maximum Ratings**

If the IC is used over the maximum ratings, the LSI may be permanently damaged.

It is preferable for the device to be normally operated within the recommended usage conditions. Usage outside of these conditions can have a bad effect on the reliability of the LSI.

**Use the Devices within Recommended Operating Conditions**

The recommended operating conditions are the recommended values that guarantee the normal operations of LSI.

The electrical ratings are guaranteed when the device is used within the recommended operating conditions and under the conditions stated for each item.

**Printed Circuit Board Ground Lines should be Set up with Consideration for Common Impedance**

**Take Appropriate Measures Against Static Electricity**

- Containers for semiconductor materials should have anti-static protection or be made of conductive material.
- After mounting, printed circuit boards should be stored and shipped in conductive bags or containers.
- Work platforms, tools, and instruments should be properly grounded.
- Working personnel should be grounded with resistance of 250 kΩ to 1 MΩ in series between body and ground.

**Do Not Apply Negative Voltages**

The use of negative voltages below -0.3V may cause the parasitic transistor to be activated on LSI lines, which can cause malfunctions.

## 13. RoHS Compliance Information

This product has observed the standard of lead, cadmium, mercury, Hexavalent chromium, polybrominated biphenyls (PBB), and polybrominated diphenyl ethers (PBDE).

## 14. Ordering Information

**Table 14-1 Ordering Information**

| Part Number | Package |
|---|---|
| CY39C831QN | 40-pin plastic QFN<br>(RLI040) |

## 15. Package Dimensions

Package Code: RLI040

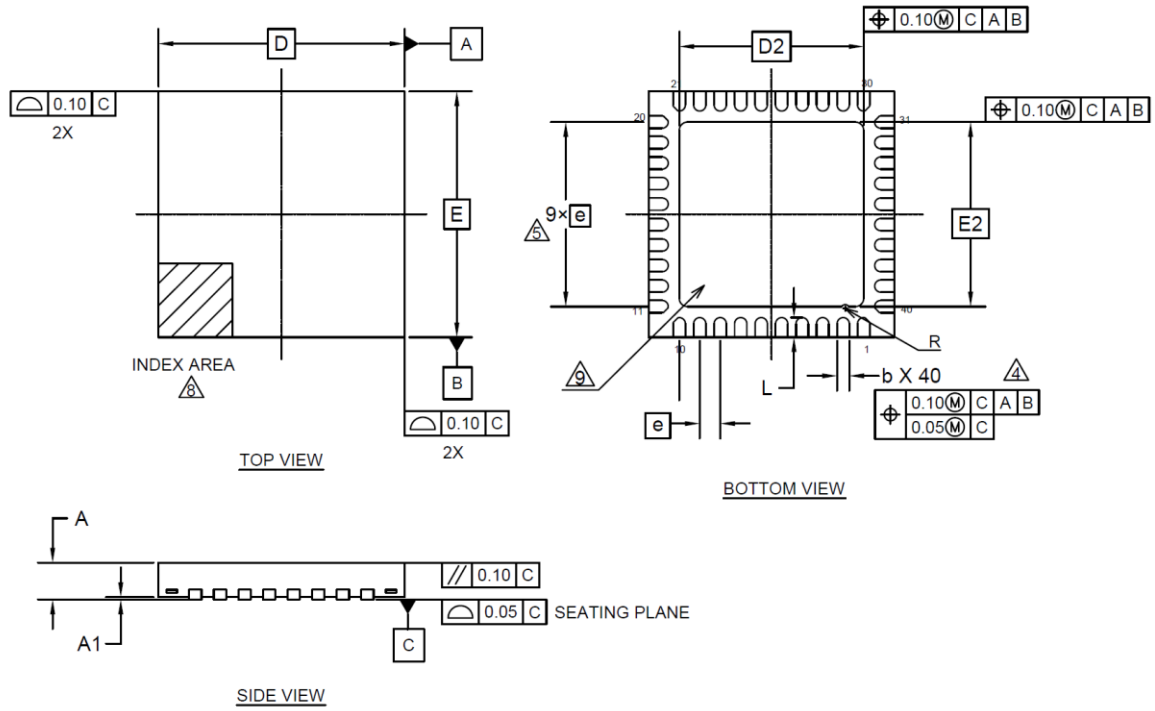


| SYMBOL | DIMENSIONS | | |
|---|---|---|---|
| | MIN. | NOM. | MAX. |
| A | — | — | 0.90 |
| A1 | 0.00 | — | 0.05 |
| D | 6.00 BSC | | |
| E | 6.00 BSC | | |
| b | 0.20 | 0.25 | 0.30 |
| D2 | 4.50 BSC | | |
| E2 | 4.50 BSC | | |
| e | 0.50 BSC | | |
| R | 0.20 | | |
| L | 0.35 | 0.40 | 0.45 |
| N | 40 | | |
| ND | 10 | | |
| NE | 10 | | |

NOTES

1. ALL DIMENSIONS ARE IN MILLIMETERS.
2. DIMENSIONING AND TOLERANCING CONFORMS TO ASME Y14.5M-1994.
3. N IS THE TOTAL NUMBER OF TERMINALS.
4. DIMENSION "b" APPLIES TO METALLIZED TERMINAL AND IS MEASURED BETWEEN 0.15 AND 0.30mm FROM TERMINAL TIP. IF THE TERMINAL HAS THE OPTIONAL RADIUS ON THE OTHER END OF THE TERMINAL, THE DIMENSION "b" SHOULD NOT BE MEASURED IN THAT RADIUS AREA
5. ND REFERS TO THE NUMBER OF TERMINALS ON D SIDE OR E SIDE.
6. MAX. PACKAGE WARPAGE IS 0.05mm.
7. MAXIMUM ALLOWABLE BURR IS 0.076mm IN ALL DIRECTIONS.
8. PIN #1 ID ON TOP WILL BE LOCATED WITHIN THE INDICATED ZONE.
9. BILATERAL COPLANARITY ZONE APPLIES TO THE EXPOSED HEAT SINK SLUG AS WELL AS THE TERMINALS.

002-19408 Rev. **

## 16. Major Changes

| Page | Section | Change Results |
|---|---|---|
| Preliminary 0.1 [June 14, 2013] | | |
| - | - | Initial release |
| Revision 1.0 [November 18, 2013] | | |
| 8 | 6.Block Diagram | Added capacitor |
| 9 | 7.Absolute Maximum Ratings | Added the Rating and of Power dissipation and Figure 7-1 |
| 11, 12 | 9.Electrical Characteristics | Divided old table into system in general table and Boost DC/DC converter table.<br>Added ENA=H into the condition on the table.<br>Changed the Input power supply current condition |
| 14 | 10.Function<br>10.3 MPPT control | Added more description |
| 16 | 10.4 Function<br>UVLO | Changed the sentence "This function is independent of MPPT_ENA." to" This function operates in the charge mode." |
| 18 | 11.Example | Added standard example |
| 19, 20 | 12.Typical Applications Circuit<br>Circuit | Added D2 and C11 |
| 21 | Parts list | Added D2 and C11 |
| 23 | 14.Ordering Information | Added "Figures 14-2 EVB ORDERING INFORMATION" |
| 24 | 15.Marking | Added new |
| 25 | 16.Product Label | Added new |
| 26 | 17.Recommended Mounting Conditions | Added new |
| - | - | Company name and layout design change |
| Revision 2.0 [August 29, 2014] | | |
| 11, 12 | 9. Electrical Characteristics<br>Table 9-1, Table 9-2 | The table of the electrical characteristics was divided into that of the constant voltage mode and that of charge mode |
| 15 | 10.2 Start-up/Shut-down sequence<br>Figure 10-1 | Added the sequences of MPPT_ENA, ENA, DET1, and DET0 pins. |
| 17 | 10.2 Start-up/Shut-down sequence<br>Figure 10-2 | Added the sequences of MPPT_ENA, ENA, DET1, and DET0 pins. |
| 19 | 10.4 Function description<br>Table 10-2, Table 10-3 | The table of the preset output voltage and the MPPT setting was divided into that of the preset output voltage and that of the MPPT setting. |
| 21 | 10.4 Function description<br>State notification<br>Table 10-4, Table 10-5 | The table of the state notification was divided into that of the constant voltage mode and that of charge mode |
| 25, 26 | 12. Application Notes | Added the 12. Application Notes |
| 27 to 31 | 13. Typical Characteristics | Added the 13. Typical Characteristics |
| 32 | 14. Layout for Printed Circuit Board | Added the 14. Layout for Printed Circuit Board |
| 36 to 39 | 18. Product Labels | Changed the 18. Product Labels |
| Revision 3.0 [October 10, 2014] | | |
| 3 | 1. Description | Made a change in the sentence.<br>(MPPT) → (MPPT: Maximum Power Point Tracking) |
| 21 | 10.4 Function description<br>State notification | Added a following sentence.<br>“The state notification is not a power good function” |

| Page | Section | Change results |
|---|---|---|
| 24 | 11. Typical Applications Circuit<br>Table 11-1 Parts list | Made a correction in the part number C6.<br>4.7 pF → 4.7 nF |
| 26 | 12. Application Notes<br>Figure 12-1 | Added a note in the "Figure 12-1 Application example using the power gating" |
| 37 | 19. Recommended Mounting Conditions<br>Table 19-1 | Made a correction in the floor life condition.<br>70%RH → 60%RH |
| Revision 4.0 | | |
| 7 | 5. Pin Descriptions | Added descriptions for all N.C. pins in "Table 5-1 Pin descriptions"<br>"Non connection pin" → "Non connection pin (Leave this pin open)" |
| 11 | 9. Electrical Characteristics<br>9.1 Electrical Characteristics of Constant Voltage Mode | Changed the parameter names in "Table 9-1"<br>"Input power supply current" → "Current dissipation 1 "<br>"Current dissipation" → "Current dissipation 2 " |
| 12 | 9. Electrical Characteristics<br>9.2 Electrical Characteristics of Charge Mode | Changed the parameter names in "Table 9-2"<br>"Current dissipation" → "Current dissipation 2 "<br>Deleted the rows of the "Input power supply current" from "Table 9-2" |
| 12 | 9. Electrical Characteristics<br>9.3 Electrical Characteristics of Boost DC/DC Converter | Deleted the "*2" annotation |
| 13 | 10. Function<br>10.1 Outline of Operation | Updated the "10.1 Outline of Operation" |
| 14, 15 | 10. Function<br>10.2 Start-up/Shut-down Sequence | Updated the "10.2 Start-up/Shut-down Sequence" |
| 16, 17 | 10. Function<br>10.3 MPPT Control | Updated the "10.3 MPPT Control" |
| 18 to 20 | 10. Function<br>10.4 Function Description | Updated the "10.4 Function Description" |
| 24, 25 | 12.Application Notes | Added the equation according to the maximum current in the "Inductor" part.<br>Added the "Table 12-1 Manufactures of Capacitors"<br>Deleted the description of the power gating from "Figure 12-1" |
| 26 to 30 | 13. Typical Characteristics | Updated the "13. Typical Characteristics"<br>Replaced the efficiency data in "Figure 13-1"<br>"Efficiency vs IOUT" → "Efficiency vs Inductor current" |
| 32 | 16. Ordering Information | Deleted the "Table 16-2 EVB Ordering information" |

**NOTE: Please see "Document History" about later revised information.**

## Document History

**Document Title: CY39C831 Ultra Low Voltage Boost PMIC for Solar/Thermal Energy Harvesting**
**Document Number: 002-08404**

| Revision | ECN | Orig. of Change | Submission Date | Description of Change |
|---|---|---|---|---|
| ** | – | TAOA | 01/30/2015 | Migrated to Cypress and assigned document number 002-08404.<br>No change to document contents or format. |
| *A | 5121759 | TAOA | 02/04/2016 | Updated to Cypress template |
| *B | 5734666 | HIXT | 05/15/2017 | Updated Pin Assignments:<br>Change the package name from QFN_40PIN to RLI040<br>Added RoHS Compliance Information<br>Updated Ordering Information:<br>Change the package name from LCC-40P-M63 to RLI040<br>Deleted “Marking”<br>Deleted “Product Labels”<br>Deleted “Recommended Mounting Conditions”<br>Updated Package Dimensions: Updated to Cypress format |
| *C | 6365783 | EIFU | 10/26/2017 | Changed part number to CY39C831<br>Remove Easy DesignSim comments |
| *D | 6453855 | ATTS | 01/21/2019 | No change; sunset reviewed. |

## Sales, Solutions, and Legal Information

### Worldwide Sales and Design Support

Cypress maintains a worldwide network of offices, solution centers, manufacturer's representatives, and distributors. To find the office closest to you, visit us at Cypress Locations.

### Products

| | |
|---|---|
| Arm® Cortex® Microcontrollers | cypress.com/arm |
| Automotive | cypress.com/automotive |
| Clocks & Buffers | cypress.com/clocks |
| Interface | cypress.com/interface |
| Internet of Things | cypress.com/iot |
| Memory | cypress.com/memory |
| Microcontrollers | cypress.com/mcu |
| PSoC | cypress.com/psoc |
| Power Management ICs | cypress.com/pmic |
| Touch Sensing | cypress.com/touch |
| USB Controllers | cypress.com/usb |
| Wireless Connectivity | cypress.com/wireless |

### PSoC® Solutions

PSoC 1 | PSoC 3 | PSoC 4 | PSoC 5LP | PSoC 6 MCU

### Cypress Developer Community

Community | Projects | Videos | Blogs | Training | Components

### Technical Support

cypress.com/support

Arm and Cortex are registered trademarks of Arm Limited (or its subsidiaries) in the US and/or elsewhere.

© Cypress Semiconductor Corporation, 2015-2019. This document is the property of Cypress Semiconductor Corporation and its subsidiaries, including Spansion LLC ("Cypress"). This document, including any software or firmware included or referenced in this document ("Software"), is owned by Cypress under the intellectual property laws and treaties of the United States and other countries worldwide. Cypress reserves all rights under such laws and treaties and does not, except as specifically stated in this paragraph, grant any license under its patents, copyrights, trademarks, or other intellectual property rights. If the Software is not accompanied by a license agreement and you do not otherwise have a written agreement with Cypress governing the use of the Software, then Cypress hereby grants you a personal, non-exclusive, nontransferable license (without the right to sublicense) (1) under its copyright rights in the Software (a) for Software provided in source code form, to modify and reproduce the Software solely for use with Cypress hardware products, only internally within your organization, and (b) to distribute the Software in binary code form externally to end users (either directly or indirectly through resellers and distributors), solely for use on Cypress hardware product units, and (2) under those claims of Cypress's patents that are infringed by the Software (as provided by Cypress, unmodified) to make, use, distribute, and import the Software solely for use with Cypress hardware products. Any other use, reproduction, modification, translation, or compilation of the Software is prohibited.

TO THE EXTENT PERMITTED BY APPLICABLE LAW, CYPRESS MAKES NO WARRANTY OF ANY KIND, EXPRESS OR IMPLIED, WITH REGARD TO THIS DOCUMENT OR ANY SOFTWARE OR ACCOMPANYING HARDWARE, INCLUDING, BUT NOT LIMITED TO, THE IMPLIED WARRANTIES OF MERCHANTABILITY AND FITNESS FOR A PARTICULAR PURPOSE. No computing device can be absolutely secure. Therefore, despite security measures implemented in Cypress hardware or software products, Cypress does not assume any liability arising out of any security breach, such as unauthorized access to or use of a Cypress product. In addition, the products described in these materials may contain design defects or errors known as errata which may cause the product to deviate from published specifications. To the extent permitted by applicable law, Cypress reserves the right to make changes to this document without further notice. Cypress does not assume any liability arising out of the application or use of any product or circuit described in this document. Any information provided in this document, including any sample design information or programming code, is provided only for reference purposes. It is the responsibility of the user of this document to properly design, program, and test the functionality and safety of any application made of this information and any resulting product. Cypress products are not designed, intended, or authorized for use as critical components in systems designed or intended for the operation of weapons, weapons systems, nuclear installations, life-support devices or systems, other medical devices or systems (including resuscitation equipment and surgical implants), pollution control or hazardous substances management, or other uses where the failure of the device or system could cause personal injury, death, or property damage ("Unintended Uses"). A critical component is any component of a device or system whose failure to perform can be reasonably expected to cause the failure of the device or system, or to affect its safety or effectiveness. Cypress is not liable, in whole or in part, and you shall and hereby do release Cypress from any claim, damage, or other liability arising from or related to all Unintended Uses of Cypress products. You shall indemnify and hold Cypress harmless from and against all claims, costs, damages, and other liabilities, including claims for personal injury or death, arising from or related to any Unintended Uses of Cypress products.

Cypress, the Cypress logo, Spansion, the Spansion logo, and combinations thereof, WICED, PSoC, CapSense, EZ-USB, F-RAM, and Traveo are trademarks or registered trademarks of Cypress in the United States and other countries. For a more complete list of Cypress trademarks, visit cypress.com. Other names and brands may be claimed as property of their respective owners.